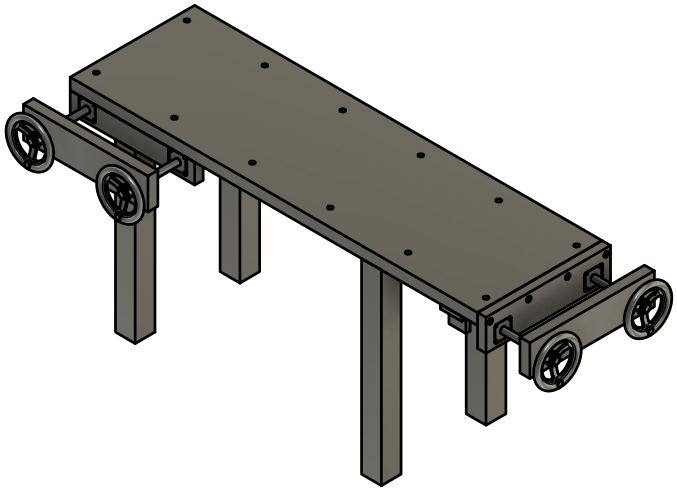

VX21 FACE VISE ASSEMBLY & INSTALLATION DIRECTIONS

NOT ALL ITEMS PICTURED IN ILLUSTRATION ARE INCLUDED

Basic operation of the VX21 mechanism

The VX21 mechanism has a keyway slot that accepts a small rectangular steel key which also engages a long keyway slot in the clamp shaft. The rotational force through the hand wheel goes through the shaft and the key and rotates the internal components in the mechanism. When the clamp shaft is rotated fully counter -clockwise the housing is unclamped and will slide freely. When attached to the front jaw it is simply slid against the work and the clamp shaft is rotated clockwise and an internal clutch automatically grips the clamp shaft and begins to clamp the work. The clamp force can be varied as desired just by varying the force applied to the handle just like a screw operated vise. The two VX21 mechanism's are actuated together by means of a unique roller chain and sprocket system keyed to the clamp shafts. The VX21 can be rotated approximately 3 turns before it stops. To unclamp rotate the handle counter-clockwise until it stops and the front vise jaw will be free to slide.

Bench Top Thickness.

The bench top can be any thickness that you like but if the top exceeds 3" thick the area where the vise mechanism operates should be excavated to form a cavity to prevent excess vertical racking. If you are installing hand wheels the bench top should be a minimum of 2-9/16" thick to prevent the hand wheels from protruding above the bench top if this is important to you.

Clamp Shaft Center Distance

The clamp shaft center distance is adjustable in 1/4" increments up to 25". A unique chain tensioning system allows the chain tension to be set up easily and accurately.

Maintenance

Clamp shaft - No need for oil or wax, just keep clean using alcohol. The use of some types of oil or wax may cause mechanism slippage.

Thrust Bearings - Occasionally lubricate with a drop or two of light machine oil like sewing machine oil or hair clipper oil. Inspect and clean annually if necessary.

VX21 mechanism - Internal grease will not break down due to usage. The grease will oxidize over time and need to be replaced. We estimate a ten-year life on the grease but this could vary based on environmental conditions. Grease is replaced by removing and dis-assembling the mechanism. Contact us prior to dis-assembly.

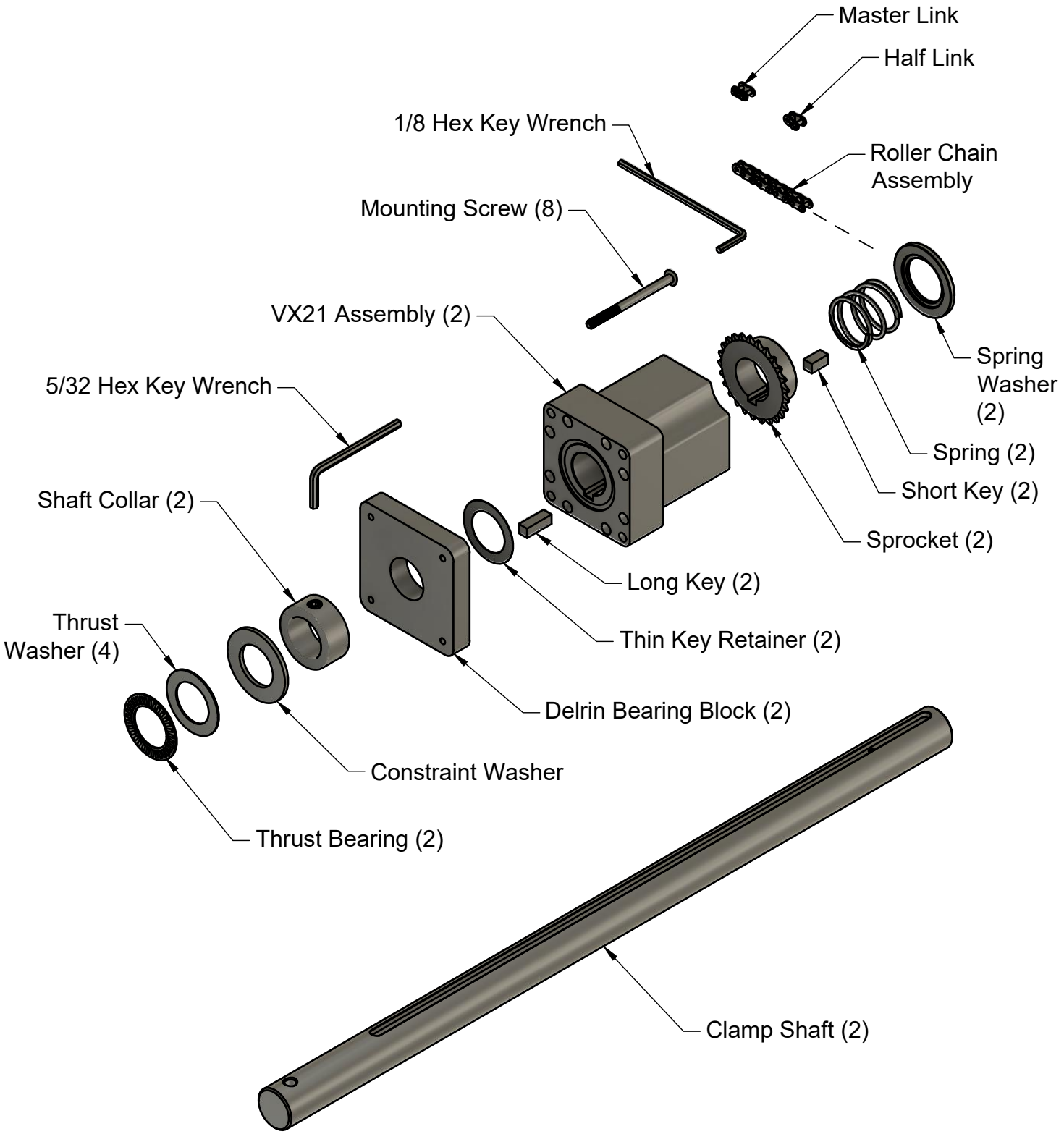

The above parts are included with the VX21 face vise hardware purchase. Please contact us if you find anything missing.

Handle Options

8" Dia. Round Profile Polished
Rim Metal Handwheel

8" Dia. Square Profile Turned
Rim Metal Handwheel

Wooden Hub and Handle

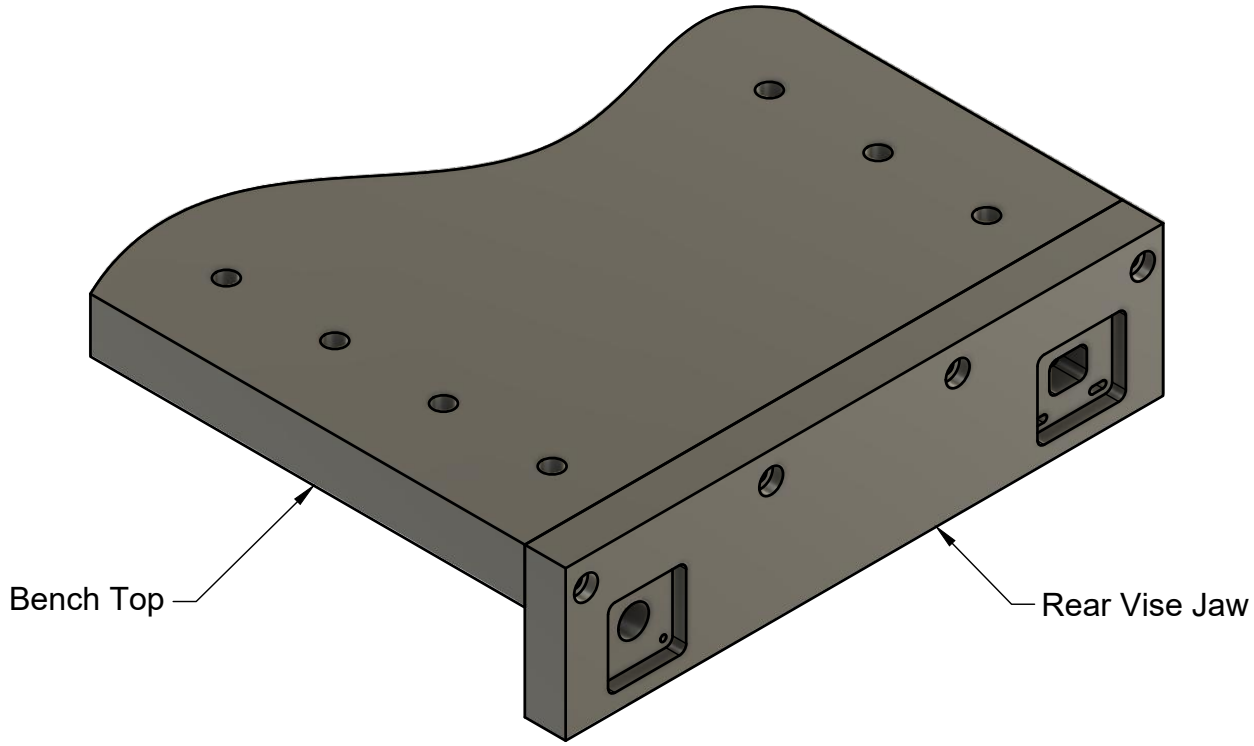

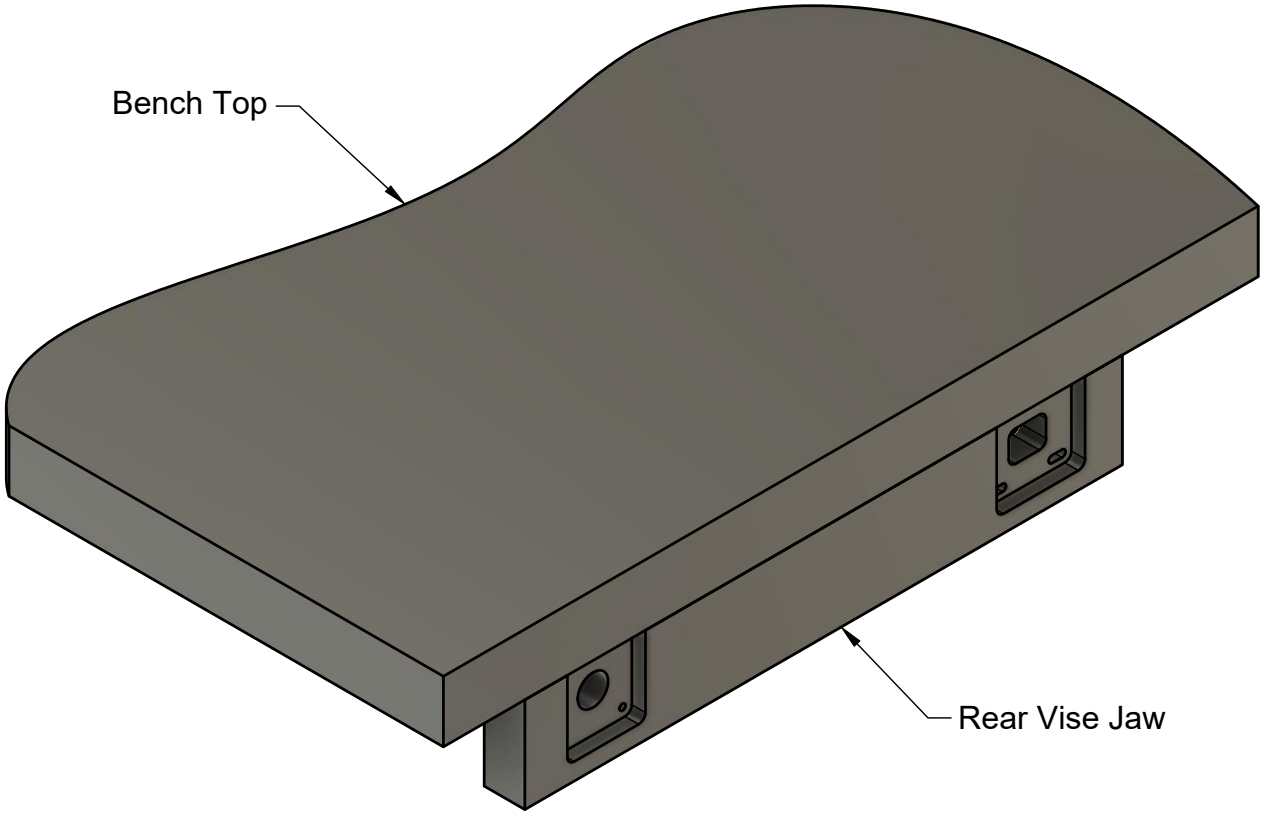

The VX21 face vise may be configured as an end vise (top) or as a face vise mounted on the long side of the bench (bottom). Follow the directions and drawings for your particular type of mounting. Regardless of mounting style the pockets for the Delrin bearing blocks are exactly the same . The only differences are in the way the rear jaw mounts to the bench top. The moveable vise jaws are not pictured above. Dogs may be used with either configuration but are not shown on the face vise configuration (bottom).

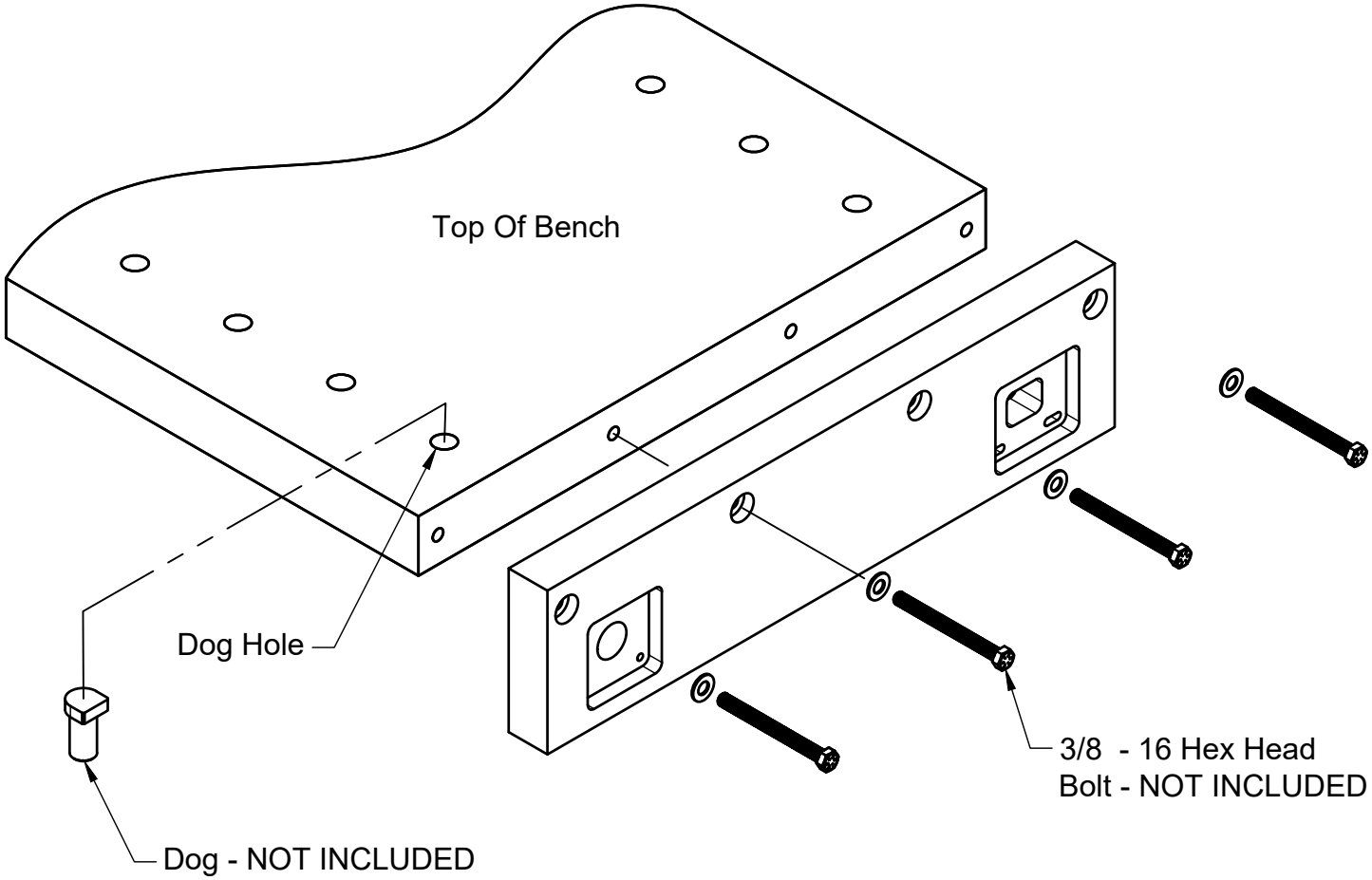

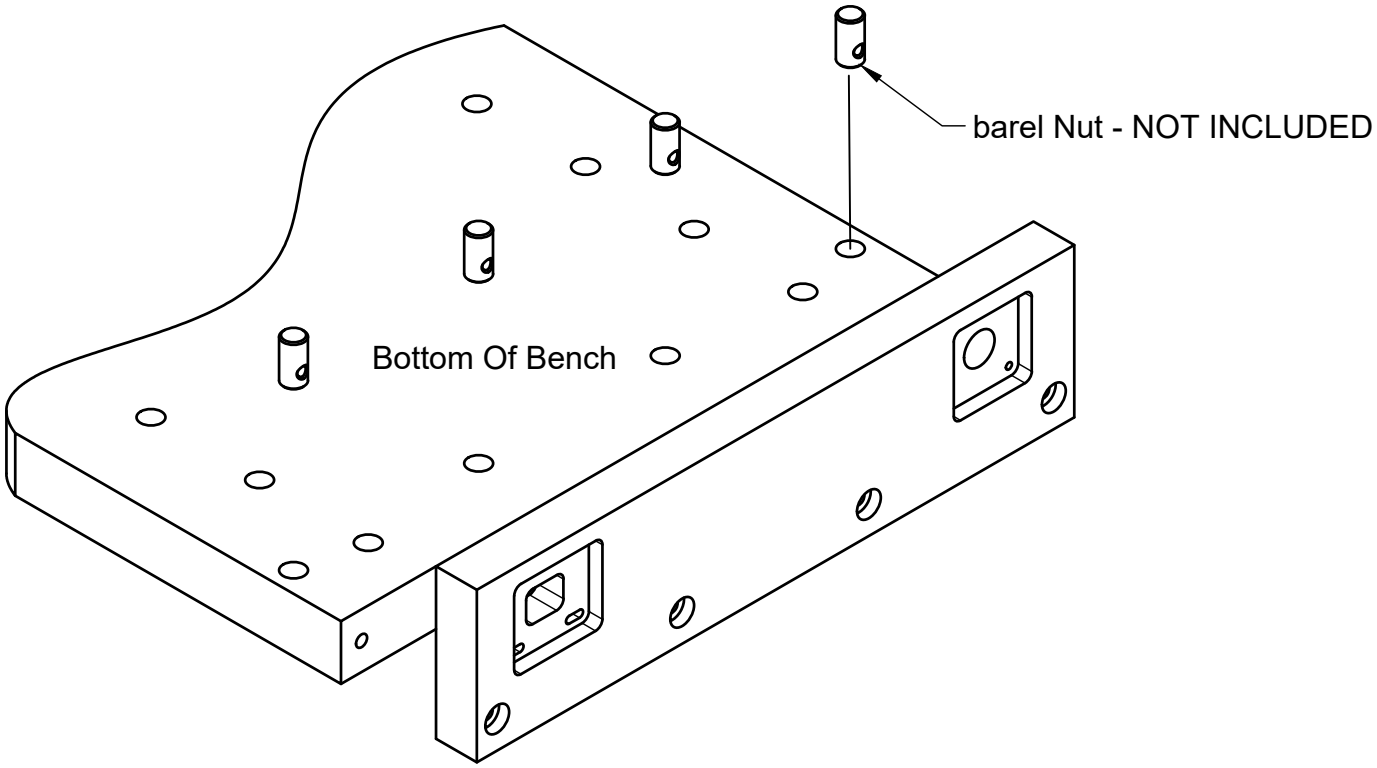

The end vise jaw may be mounted to the bench top using bolts (not included) threaded into cross dowels (not included) inserted into holes in the bottom of the bench top. Place dog holes in line with the clamp shafts or inboard of the clamp shafts. Please note that if the dog holes are in line with the clamp shafts you will need to use a short headed type dog as shown above. Move the dog holes slightly inboard if you would like to use longer dogs or holdfasts in the dog holes.

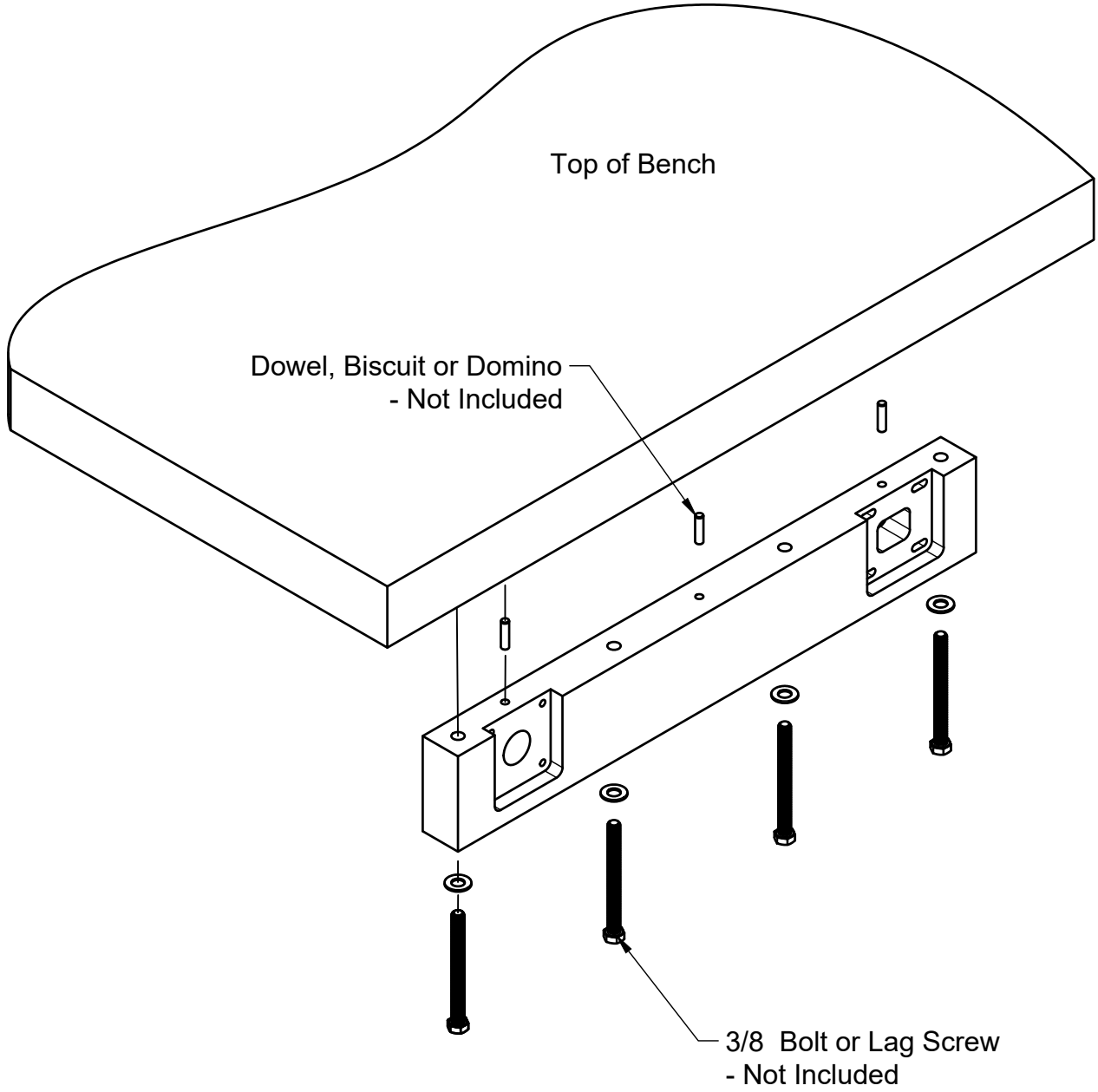

When mounting the face vise rear jaw to the bench top, bolts or lag screws (not included) may be used for fastening. If bolts are used an appropriate tap should be used to thread the holes drilled into the bottom of the bench top. Dowels, biscuits or dominos (not included) should be used to locate and secure the rear jaw from fore - aft movement when the vise is in use. Drill the mounting and dowel holes into the rear jaw first and transfer the mounting hole locations to the bench top using transfer punches or drill bits. The dowel pin locations are best transfered using dowel centers. If you are using biscuits or dominos make sure to use common locating faces.

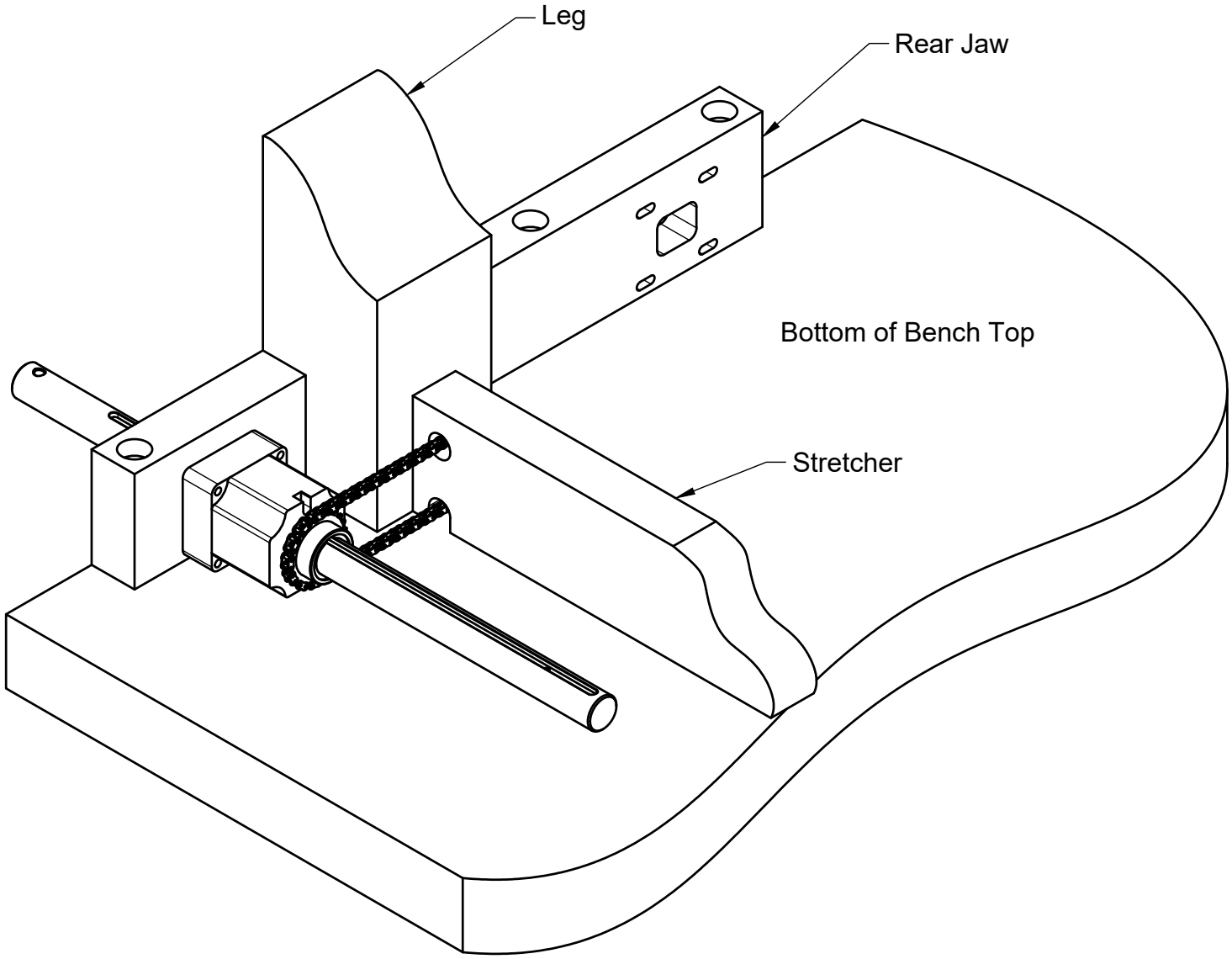

The VX21 face vise may straddle a leg by making provisions in the stretcher to accommodate the chain. In this case a drilled hole and a slot allow the chain to pass through the stretcher. The chain is far enough back to operate behind most legs. Note that as the vise clamps the sprockets travel rearward with the clamp shafts, so make sure you have enough clearance to the chain. The spring block is not shown in this drawing for clarity.

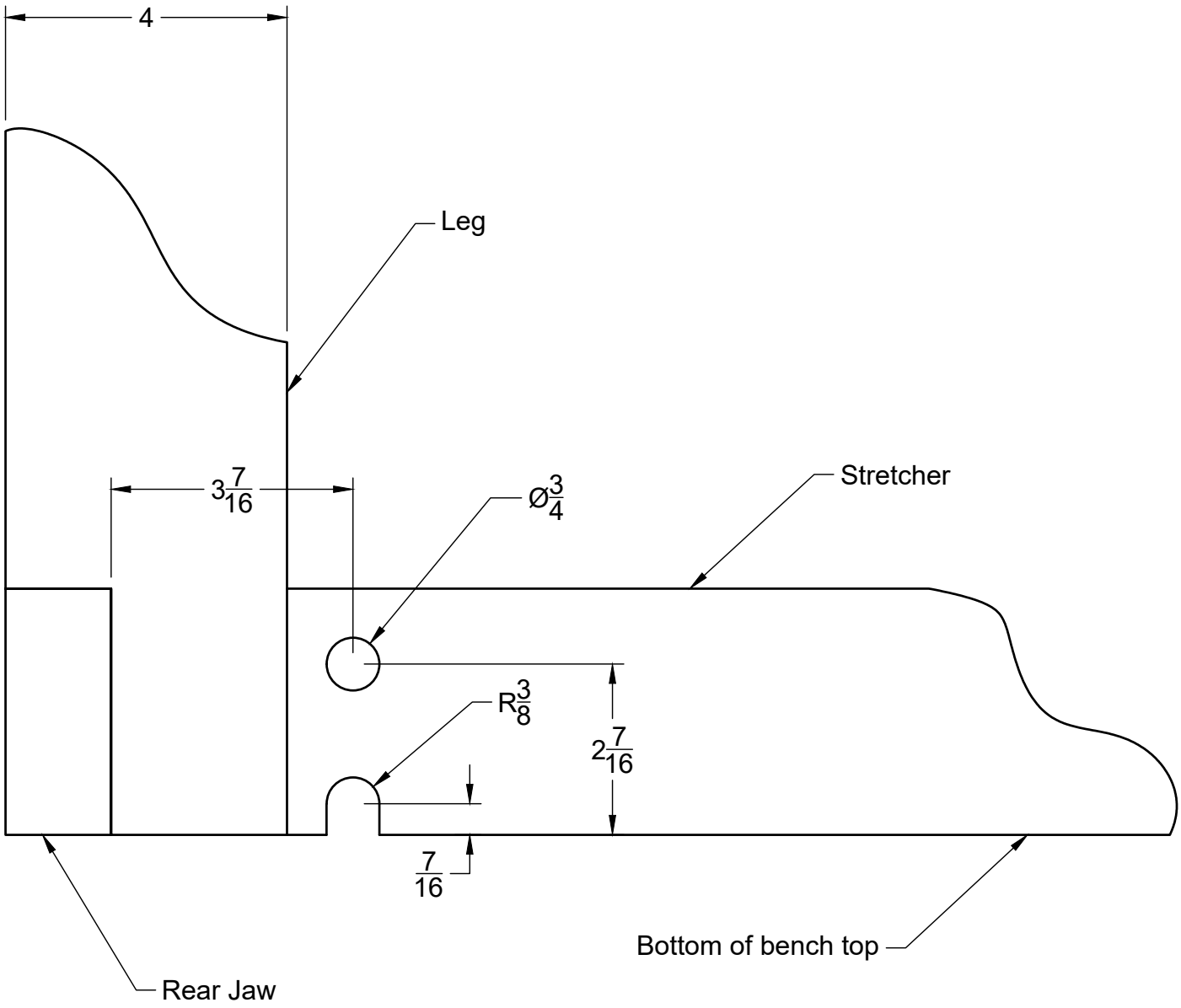

This drawing end view shows some typical dimensions for the through holes in the stretcher to accept the roller chain. You may have to adjust these dimensions for your particular stretcher or leg dimensions. Please note that adjustments to the holes may have to be made by removing additional material from the holes to prevent chain rubbing.

If you are installing a face vise use the following drawing in conjunction with the template on page 11 to make the rear jaw. Print out the template full size and check the scale to make sure it is correct. The total width of the rear jaw will be the required clamp shaft center distance plus 6 inches. Route out the 1/2" deep pockets and then use the templates on the opposite side to layout the holes and slots that will be needed. Align the top of the template to the top of the rear jaw using the marked lines on the template.
Equally space the mounting holes and adjust spacing to account for any obstructions such as bench legs or stretchers.

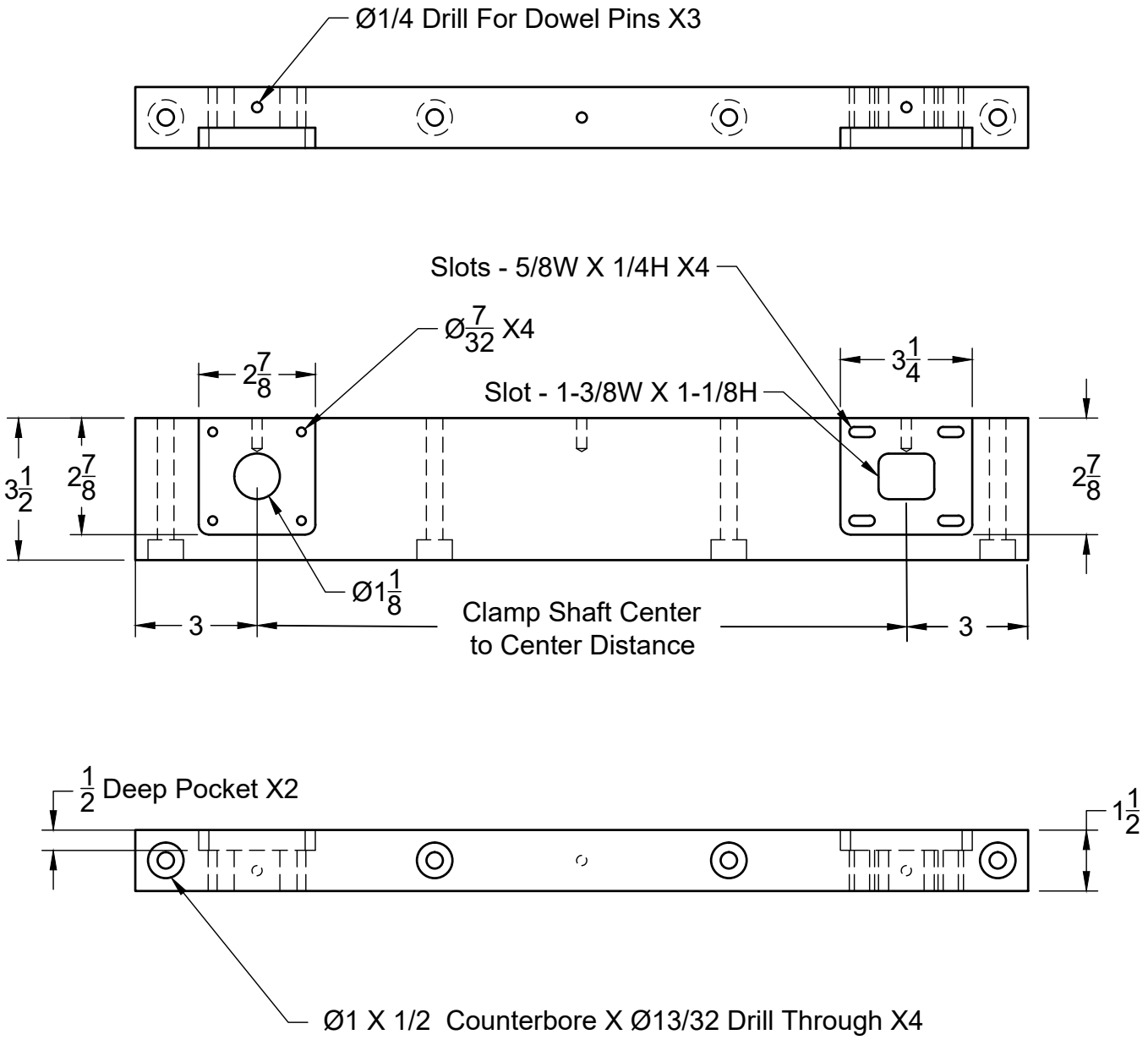

Face Vise Rear Jaw

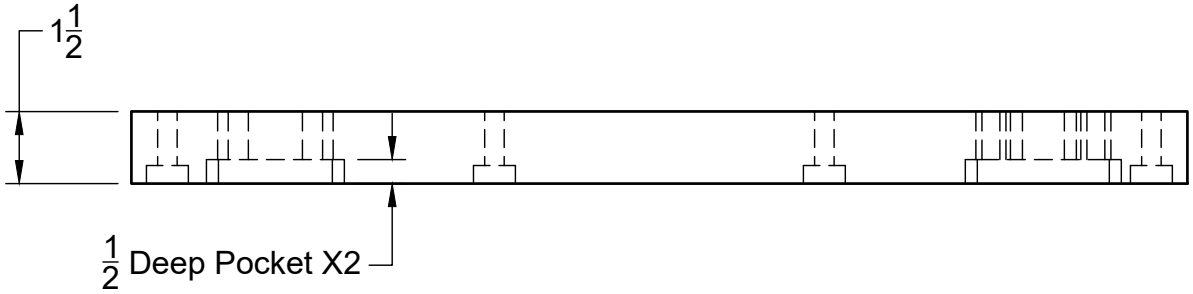

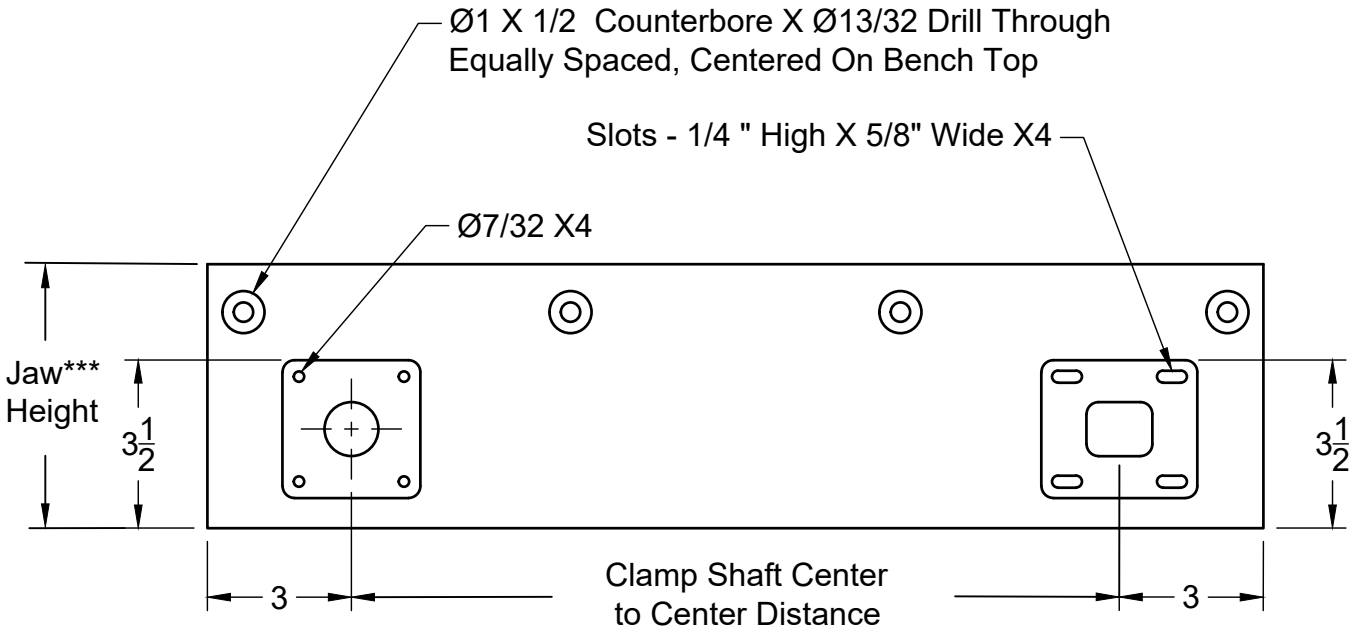

End Vise Rear Jaw

If you are installing an end vise use the following drawing in conjunction with the template on page 11 to make the rear jaw. Print out the template full size and check the scale to make sure it is correct. The total width of the rear jaw will be the required clamp shaft center distance plus 6 inches. ***The jaw height is 3-1/2" + bench top thickness. Route out the 1/2" deep pockets and then use the templates on the opposite side to layout the holes and slots that will be needed. Place a layout line on the jaw where the bottom of the bench top is and align the top of the template to the layout line.
Equally space the mounting holes and place them on the bench top center.

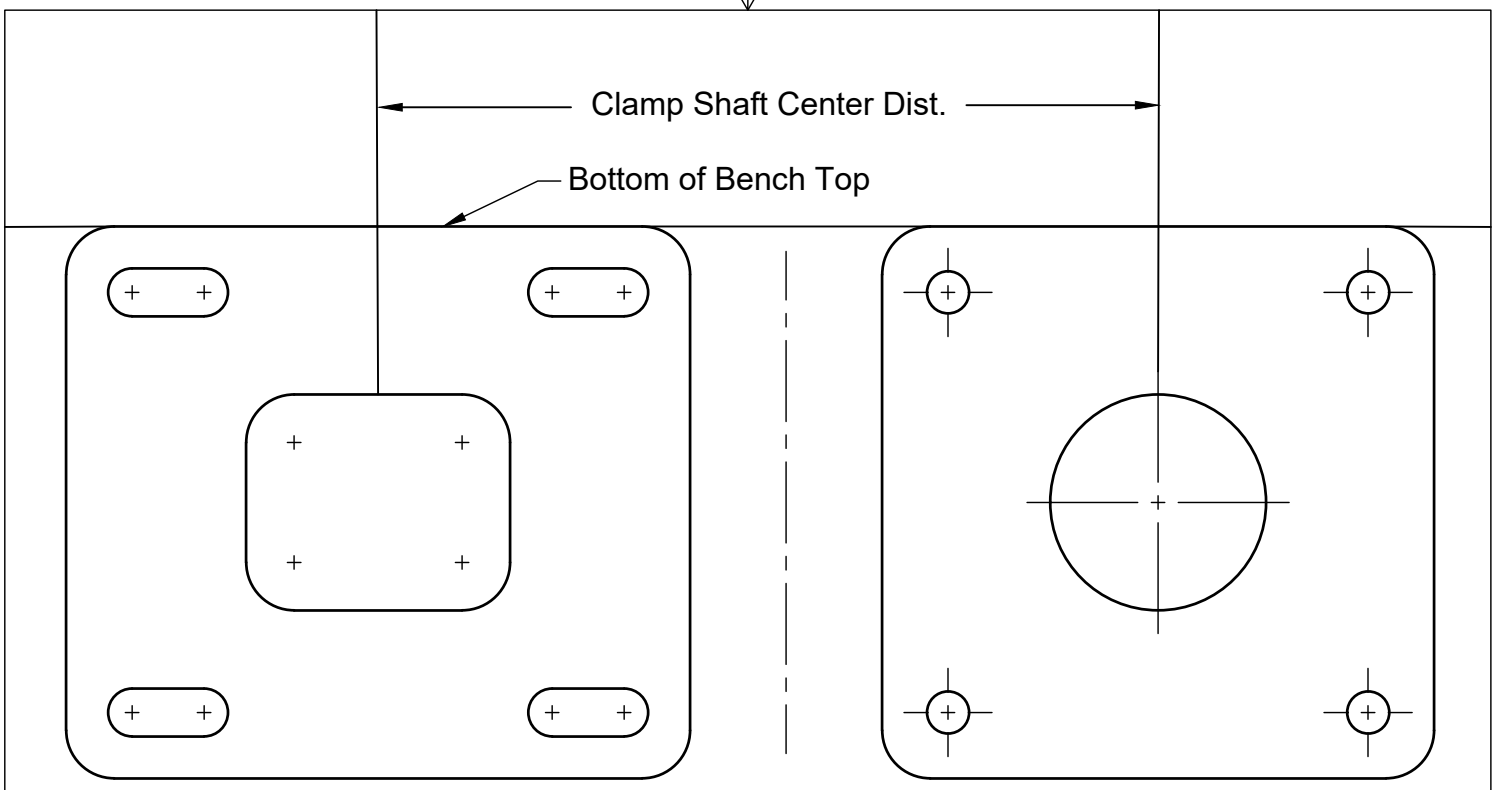

END VISE TEMPLATES

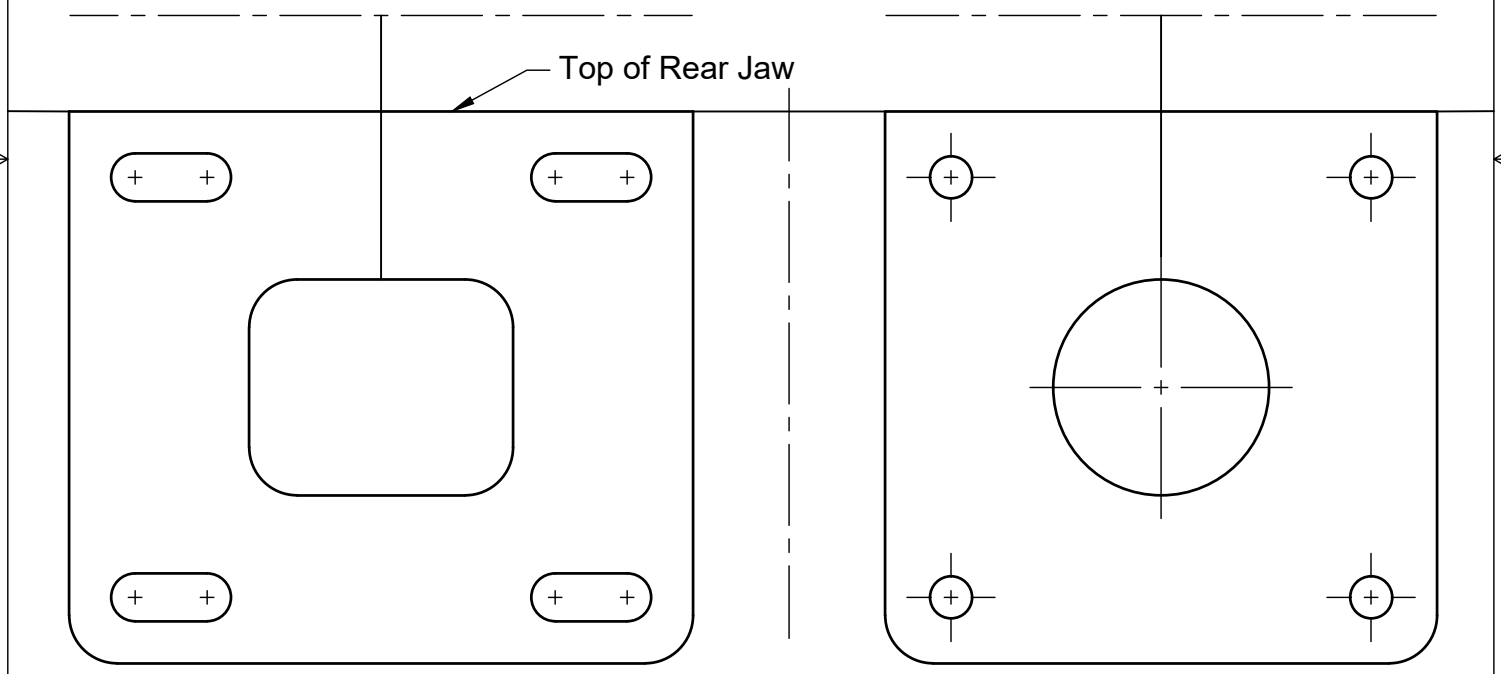

FACE VISE TEMPLATES

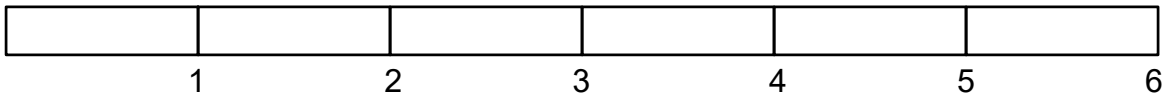

CHECK SCALE - INCHES

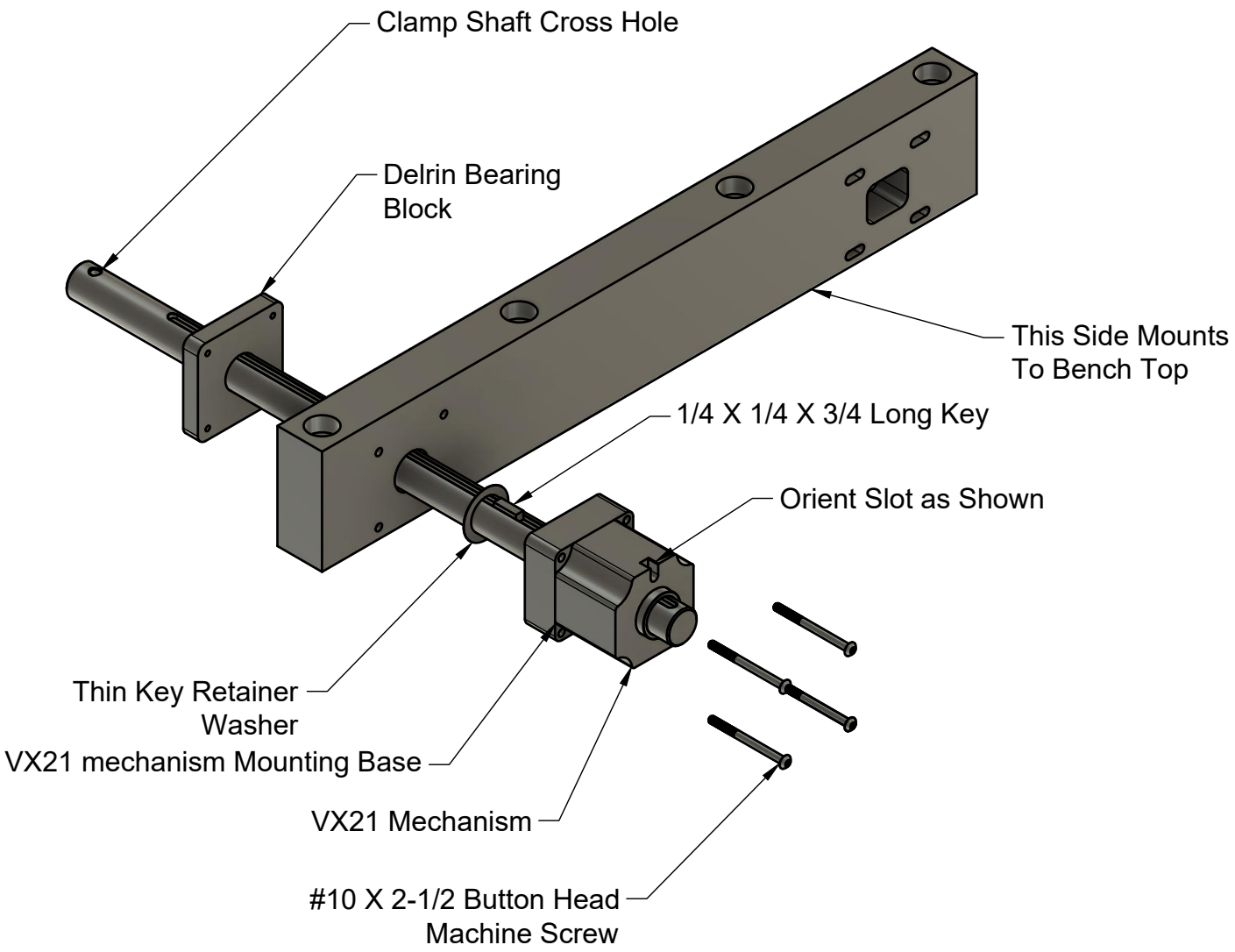

Place the clamp shaft through the rear jaw with the clamp shaft cross hole and keyway oriented as shown above. This assembly procedure may be done with the rear jaw either mounted to the bench top or free. Assembly will be a little easier with the rear jaw not mounted to the bench top because you will have better access to the fasteners etc. The rear jaw shown is for the face mount but the assembly for the end mounting will be exactly the same. Install the Delrin Bearing Block into the pocket and then place the thin key retainer washer onto the shaft and against the rear jaw. Place the 3/4" long key into the clamp shaft keyway slot as shown (make sure the key is 3/4" long. there is another different key used that is 1/2" long). Orient the VX21 mechanism as shown above and place on the shaft. You may need to insert your finger into the mechanism hole on the mounting base side and shift the internal components to align them and allow the shaft to slip through. Slide the VX21 mechanism up against the vise jaw while aligning the key with the keyway slot in the collar in the mounting base of the mechanism. When assembled the VX21 mechanism should be tight against the rear jaw. Install the four button head mounting screws through the VX21 mechanism mounting base and into the threaded holes of the Delrin bearing block. Use the 1/8 hex key wrench to firmly tighten the mounting screws. Repeat this procedure on the other side but do not fully tighten the mounting screws so the assembly will slide back and forth.

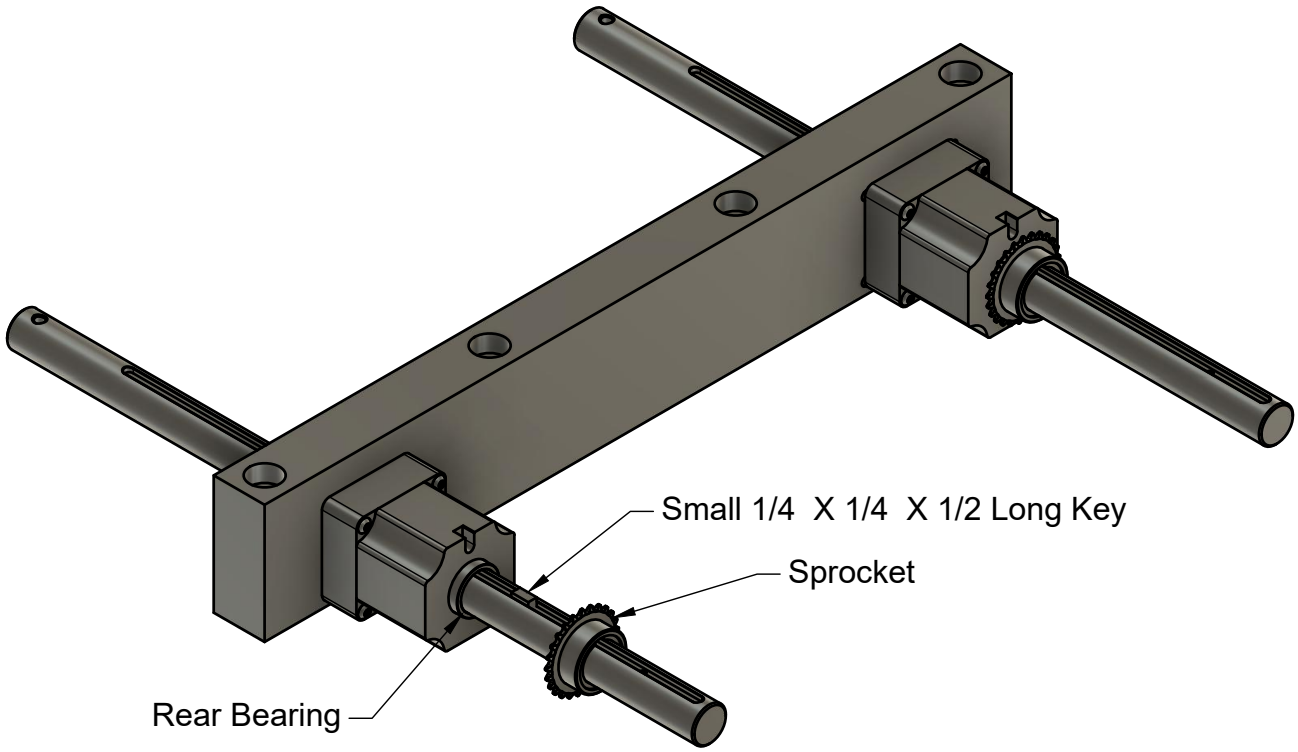

Place the small 1/4 X 1/4 X $\frac{1}{2}$ long key into the clamp shaft keyway slot as shown. Slide the sprocket onto the clamp shaft with the sprocket teeth closest to the VX21 mechanism. Align the keyway slot in the sprocket with the key just inserted into the clamp shaft keyway slot and slide the sprocket against the rear bearing of the VX21 mechanism. Repeat this installation on the other side.

ROLLER CHAIN TERMINOLOGY

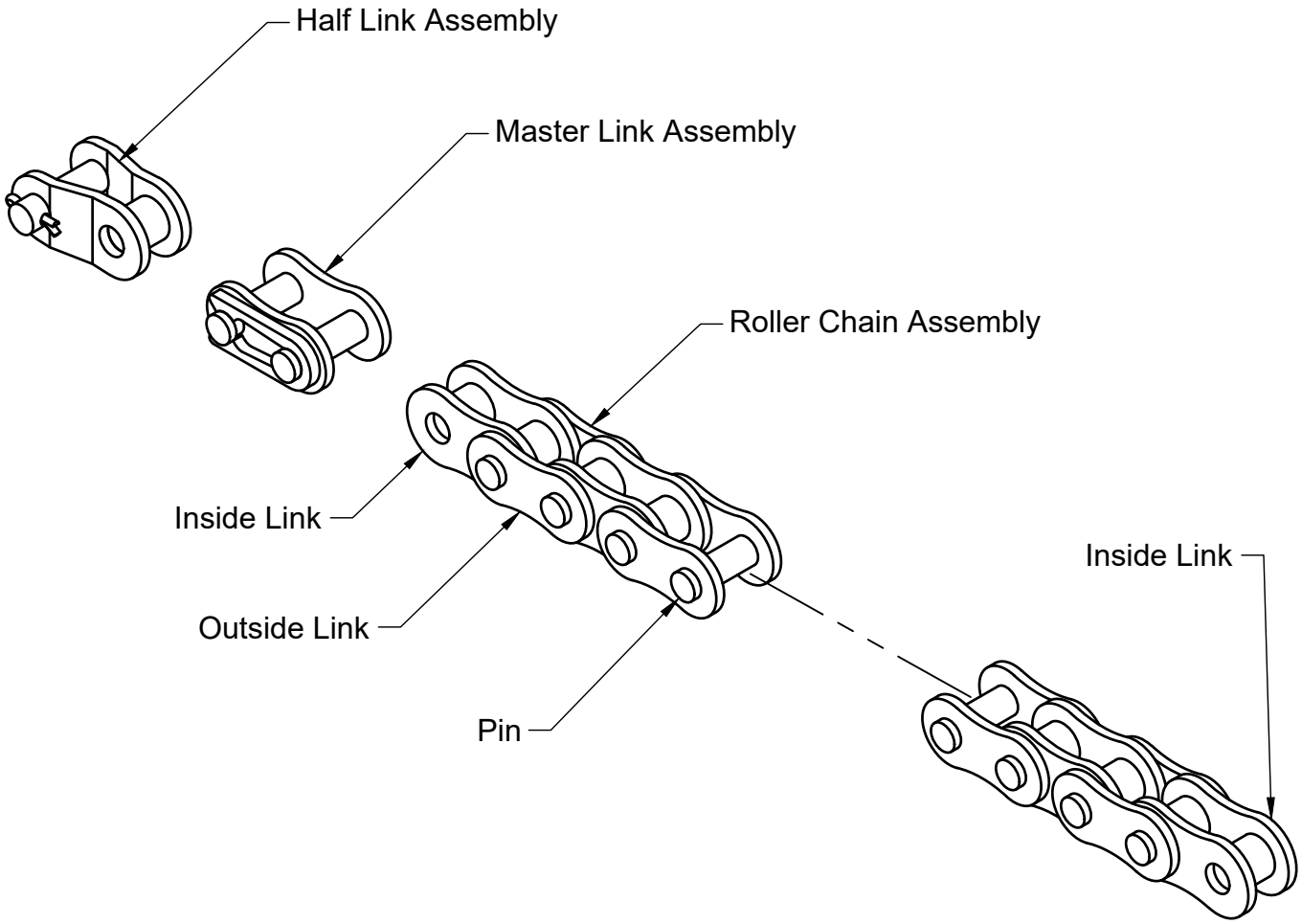

Before you assemble the roller chain to the sprockets it will help to become familiar with the various parts and assemblies of the roller chain system.

Roller Chain Assembly - The roller chain assembly is already set up for a 25" center distance between the clamp shafts. If you are using any center distance other than 25" the roller chain assembly will have to be shortened to a specific dimension. The roller chain is shortened by filing or grinding down the head of the pins to remove links. When this is completed the roller chain will have inside links on both ends as shown above. The inside links have hollow pins that will allow the roller chain to be linked by inseting the pins of the master link and half link through them. By using a chart and the directions that follow you will determine which pin to file off by counting outside links or using a chain length measurement in the chart.

Half Link Assembly - This assembly has a very small removeable headed pin that is secured with a cotter pin installed in a cross hole in the end of the pin. This link will allow you to make the chain to a very specific dimension and will link the inside link of the roller chain assembly to one side of the master link.

Master Link Assembly - This assembly consists of an outside link plate with 2 pins affixed and 2 inside link plates that slide onto the 2 pins. The assembly is held together with a spring clip that is secured into grooves in the ends of the 2 pins. This link will attach the 2 ends of the chain and will also allow the chain to be easily taken apart if needed.

There are a few very small part that will need to be handled, so have a clean area with good lighting when you begin assembly.

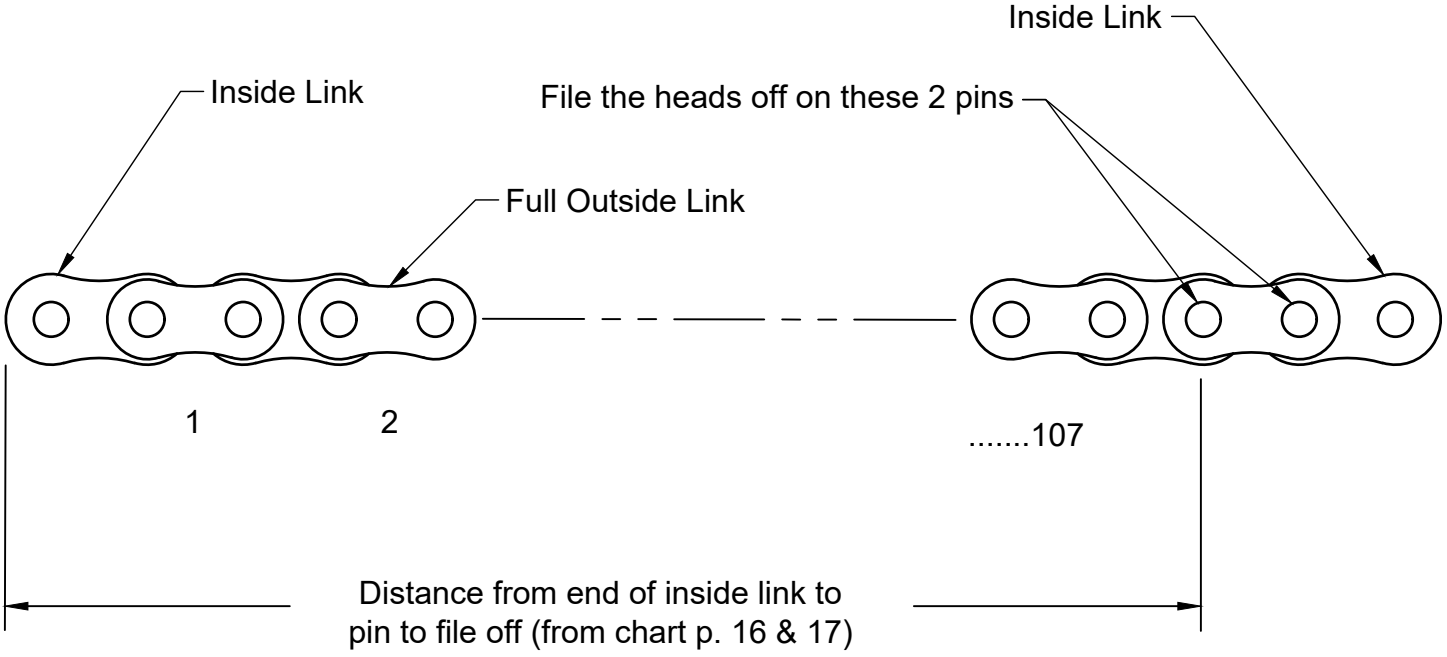

If you have a 25" clamp shaft center to center distance your chain is already the correct length and you may skip to the next page. Find the clamp shaft center distance you are using in the charts on pages 16 and 17. Note the number of full outside links and the distance from end of inside link to pin to file off. Place the chain on a flat surface and stretch it out so that it is straight. Identify the pin to file off by measuring from the end of the inside link on one end of the chain to the pin using the dimension from the chart. You may also count the number of full outside links as a double check. As an example, If you have a 24" center distance the measurement would be 53-7/8" to the pin to file off and the number of full outside links would be 107. You would file off the pins after link 107 as shown above. Mark the pins to file off and then file the peened end of the pin so it is flush with the outside link plate. Don't worry about damaging the outside link plate, it will be discarded. Pop the outside link plate off and remove the section of chain after the the outside plate is removed. You should now have a section of chain that is the correct length and has inside links on each end.

CHAIN LENGTH TABLE

CENTER DISTANCE	FULL OUTSIDE LINKS	DISTANCE FROM END OF INSIDE LINK TO PIN TO FILE OFF	CHAIN LINK ORIENTATION ON BOTTOM PINION TOOTH THAT IS ALIGNED WITH PINION KEYWAY
12	59	29-7/8	CENTER OF OUTSIDE LINK TO CENTER OF OUTSIDE LINK
12 1/4	60	30-3/8	CENTER OF OUTSIDE LINK TO BETWEEN OUTSIDE LINKS
12 1/2	61	30-7/8	CENTER OF OUTSIDE LINK TO CENTER OF OUTSIDE LINK
12 3/4	62	31-3/8	CENTER OF OUTSIDE LINK TO BETWEEN OUTSIDE LINKS
13	63	31-7/8	CENTER OF OUTSIDE LINK TO CENTER OF OUTSIDE LINK
13 1/4	64	32-3/8	CENTER OF OUTSIDE LINK TO BETWEEN OUTSIDE LINKS
13 1/2	65	32-7/8	CENTER OF OUTSIDE LINK TO CENTER OF OUTSIDE LINK
13 3/4	66	33-3/8	CENTER OF OUTSIDE LINK TO BETWEEN OUTSIDE LINKS
14	67	33-7/8	CENTER OF OUTSIDE LINK TO CENTER OF OUTSIDE LINK
14 1/4	68	34-3/8	CENTER OF OUTSIDE LINK TO BETWEEN OUTSIDE LINKS
14 1/2	69	34-7/8	CENTER OF OUTSIDE LINK TO CENTER OF OUTSIDE LINK
14 3/4	70	35-3/8	CENTER OF OUTSIDE LINK TO BETWEEN OUTSIDE LINKS
15	71	35-7/8	CENTER OF OUTSIDE LINK TO CENTER OF OUTSIDE LINK
15 1/4	72	36-3/8	CENTER OF OUTSIDE LINK TO BETWEEN OUTSIDE LINKS
15 1/2	73	36-7/8	CENTER OF OUTSIDE LINK TO CENTER OF OUTSIDE LINK
15 3/4	74	37-3/8	CENTER OF OUTSIDE LINK TO BETWEEN OUTSIDE LINKS
16	75	37-7/8	CENTER OF OUTSIDE LINK TO CENTER OF OUTSIDE LINK
16 1/4	76	38-3/8	CENTER OF OUTSIDE LINK TO BETWEEN OUTSIDE LINKS
16 1/2	77	38-7/8	CENTER OF OUTSIDE LINK TO CENTER OF OUTSIDE LINK
16 3/4	78	39-3/8	CENTER OF OUTSIDE LINK TO BETWEEN OUTSIDE LINKS
17	79	39-7/8	CENTER OF OUTSIDE LINK TO CENTER OF OUTSIDE LINK
17 1/4	80	40-3/8	CENTER OF OUTSIDE LINK TO BETWEEN OUTSIDE LINKS
17 1/2	81	40-7/8	CENTER OF OUTSIDE LINK TO CENTER OF OUTSIDE LINK
17 3/4	82	41-3/8	CENTER OF OUTSIDE LINK TO BETWEEN OUTSIDE LINKS
18	83	41-7/8	CENTER OF OUTSIDE LINK TO CENTER OF OUTSIDE LINK
18 1/4	84	42-3/8	CENTER OF OUTSIDE LINK TO BETWEEN OUTSIDE LINKS
18 1/2	85	42-7/8	CENTER OF OUTSIDE LINK TO CENTER OF OUTSIDE LINK

CHAIN LENGTH TABLE

CENTER DISTANCE	FULL OUTSIDE LINKS	DISTANCE FROM END OF INSIDE LINK TO PIN TO FILE OFF	CHAIN LINK ORIENTATION ON BOTTOM PINION TOOTH THAT IS ALIGNED WITH PINION KEYWAY
18 3/4	86	43-3/8	CENTER OF OUTSIDE LINK TO BETWEEN OUTSIDE LINKS
19	87	43-7/8	CENTER OF OUTSIDE LINK TO CENTER OF OUTSIDE LINK
19 1/4	88	44-3/8	CENTER OF OUTSIDE LINK TO BETWEEN OUTSIDE LINKS
19 1/2	89	44-7/8	CENTER OF OUTSIDE LINK TO CENTER OF OUTSIDE LINK
19 3/4	90	45-3/8	CENTER OF OUTSIDE LINK TO BETWEEN OUTSIDE LINKS
20	91	45-7/8	CENTER OF OUTSIDE LINK TO CENTER OF OUTSIDE LINK
20 1/4	92	46-3/8	CENTER OF OUTSIDE LINK TO BETWEEN OUTSIDE LINKS
20 1/2	93	46-7/8	CENTER OF OUTSIDE LINK TO CENTER OF OUTSIDE LINK
20 3/4	94	47-3/8	CENTER OF OUTSIDE LINK TO BETWEEN OUTSIDE LINKS
21	95	47-7/8	CENTER OF OUTSIDE LINK TO CENTER OF OUTSIDE LINK
21 1/4	96	48-3/8	CENTER OF OUTSIDE LINK TO BETWEEN OUTSIDE LINKS
21 1/2	97	48-7/8	CENTER OF OUTSIDE LINK TO CENTER OF OUTSIDE LINK
21 3/4	98	49-3/8	CENTER OF OUTSIDE LINK TO BETWEEN OUTSIDE LINKS
22	99	49-7/8	CENTER OF OUTSIDE LINK TO CENTER OF OUTSIDE LINK
22 1/4	100	50-3/8	CENTER OF OUTSIDE LINK TO BETWEEN OUTSIDE LINKS
22 1/2	101	50-7/8	CENTER OF OUTSIDE LINK TO CENTER OF OUTSIDE LINK
22 3/4	102	51-3/8	CENTER OF OUTSIDE LINK TO BETWEEN OUTSIDE LINKS
23	103	51-7/8	CENTER OF OUTSIDE LINK TO CENTER OF OUTSIDE LINK
23 1/4	104	52-3/8	CENTER OF OUTSIDE LINK TO BETWEEN OUTSIDE LINKS
23 1/2	105	52-7/8	CENTER OF OUTSIDE LINK TO CENTER OF OUTSIDE LINK
23 3/4	106	53-3/8	CENTER OF OUTSIDE LINK TO BETWEEN OUTSIDE LINKS
24	107	53-7/8	CENTER OF OUTSIDE LINK TO CENTER OF OUTSIDE LINK
24 1/4	108	54-3/8	CENTER OF OUTSIDE LINK TO BETWEEN OUTSIDE LINKS
24 1/2	109	54-7/8	CENTER OF OUTSIDE LINK TO CENTER OF OUTSIDE LINK
24 3/4	110	55-3/8	CENTER OF OUTSIDE LINK TO BETWEEN OUTSIDE LINKS
25	111	55-7/8	CENTER OF OUTSIDE LINK TO CENTER OF OUTSIDE LINK

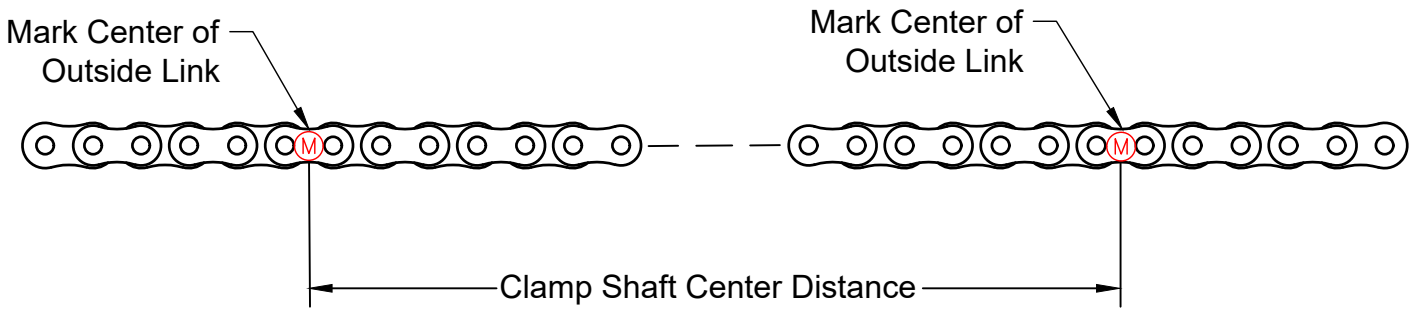

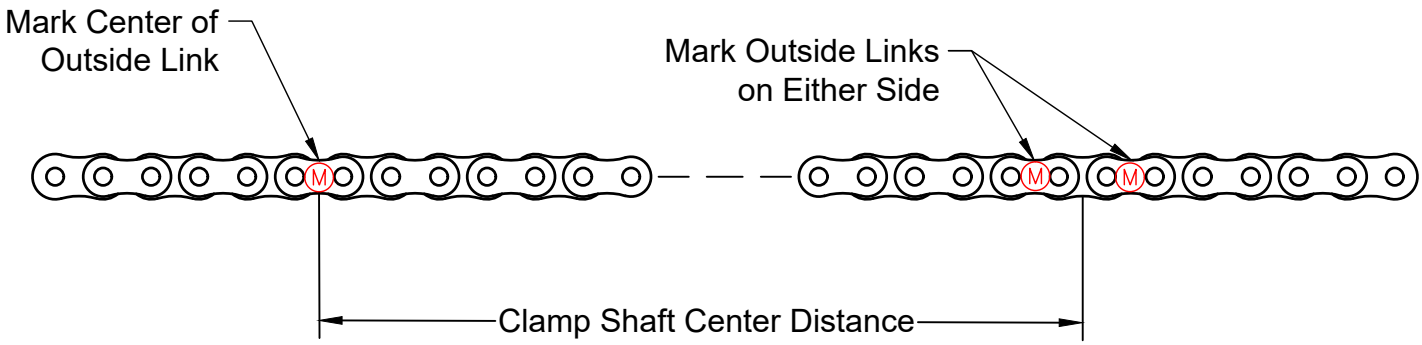

Refer to the far right column of the chain length table on pages 16 and 17 to determine if you will mark the chain from the center of outside link to center of outside link (top diagram) or from the center of outside link to between outside links (bottom diagram) for your particular center distance. These marks will allow you to install the chain on the sprockets without creating unbalanced tension in the chain. Locate the first mark so that you will end up with approximately equal lengths of chain on either side of the marks. This will put the connecting link approximately midway between the sprockets making assembly easier. Stretch the chain out in a straight line and use a tape measure and a light colored marker, paint pen or fingernail polish to mark the center distance on the chain.

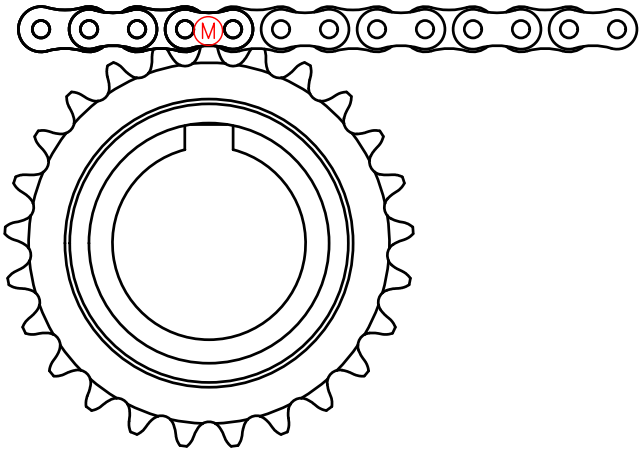

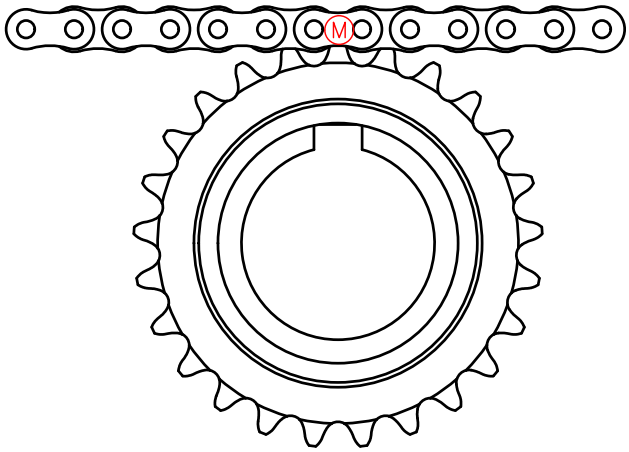

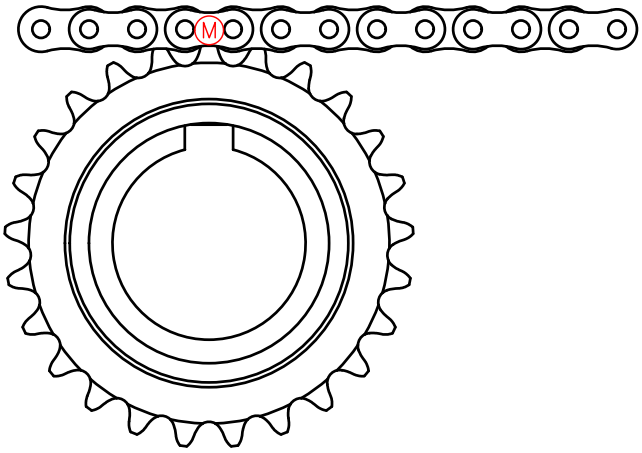

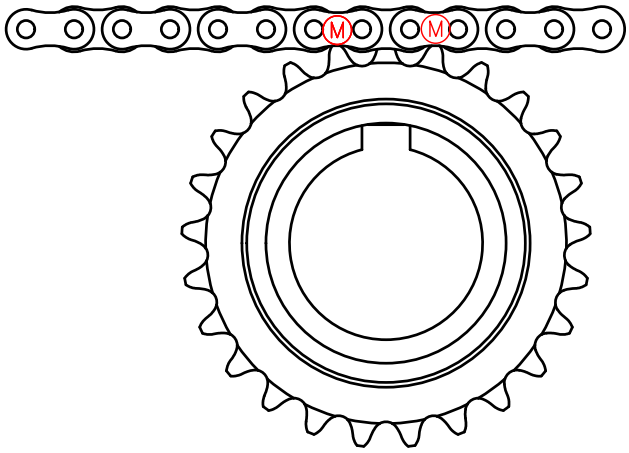

Ensure that the vise is in the unclamped state by rotating the clamp shafts fully counter-clockwise as viewed from the front. The shafts should slide in and out freely and the shaft keyway slot will be facing up. Install the chain onto the sprockets by aligning the marks with the sprocket tooth that is aligned with the keyway slot in the sprocket. The sprocket tooth aligned with the keyway slot will have a white paint mark on it. If there is only one mark on the chain then the tooth on the sprocket will line up with the mark. If there are 2 marks on the chain then the tooth will line up in between the marks as shown above. If you have a stretcher or other feature that the chain must go through, that feature must be in place and the chain will have to be fed through the holes for the installation. The chain may also be installed with the bench standing upright. The procedure is the same but access to the sprockets will be a little more difficult.

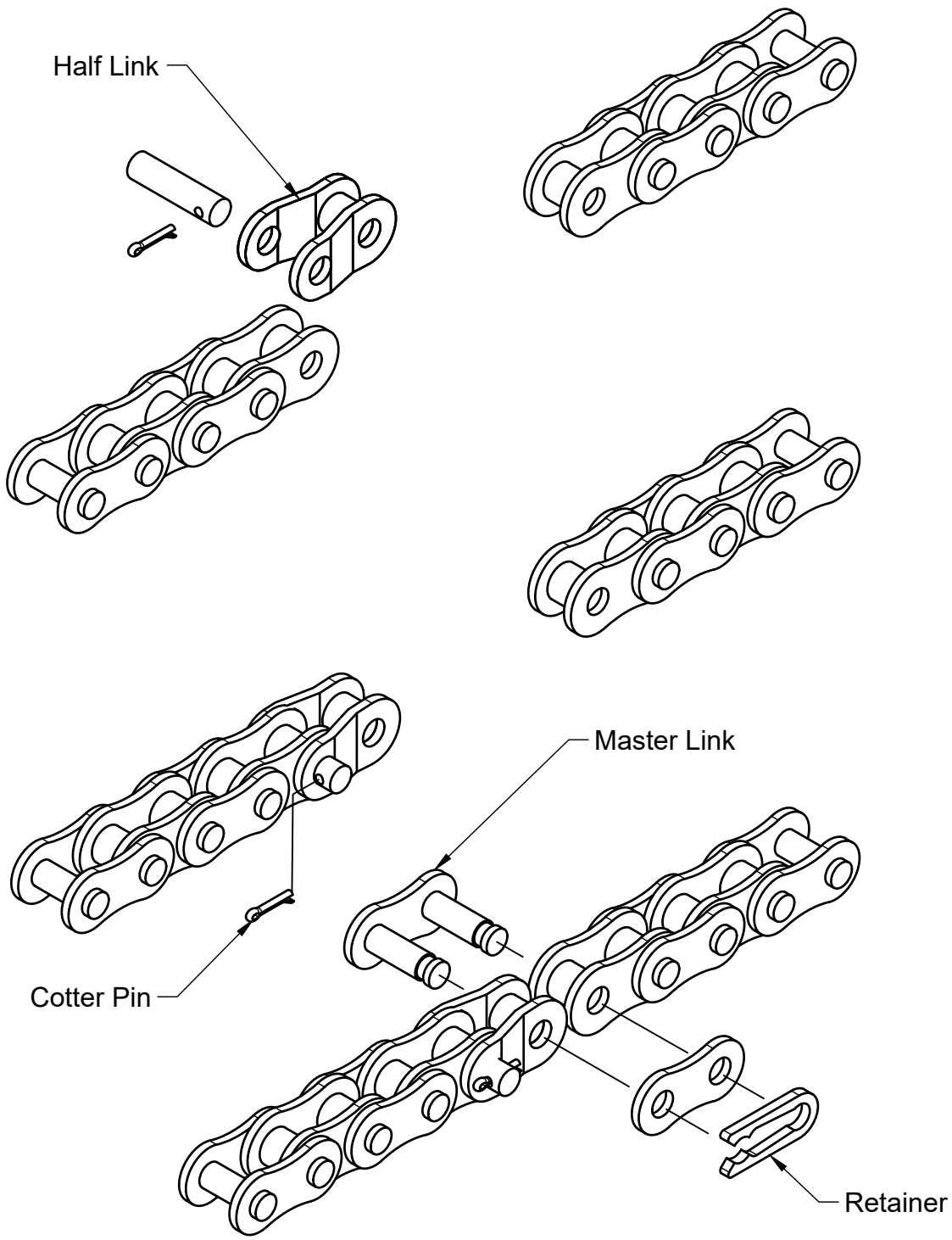

Connect the two ends of the chain together by first adding the half link as shown (top & middle) and then add the master link as shown (bottom). The half link is secured with the small cotter pin. Insert it into the cross hole of the pin and bend the ends to prevent it from falling out. The master link is secured by putting the retainer over the pins on the releived areas of the retainer and then forcing the retainer sideways to expand around the pin grooves using a screwdriver or needle nose pliers.

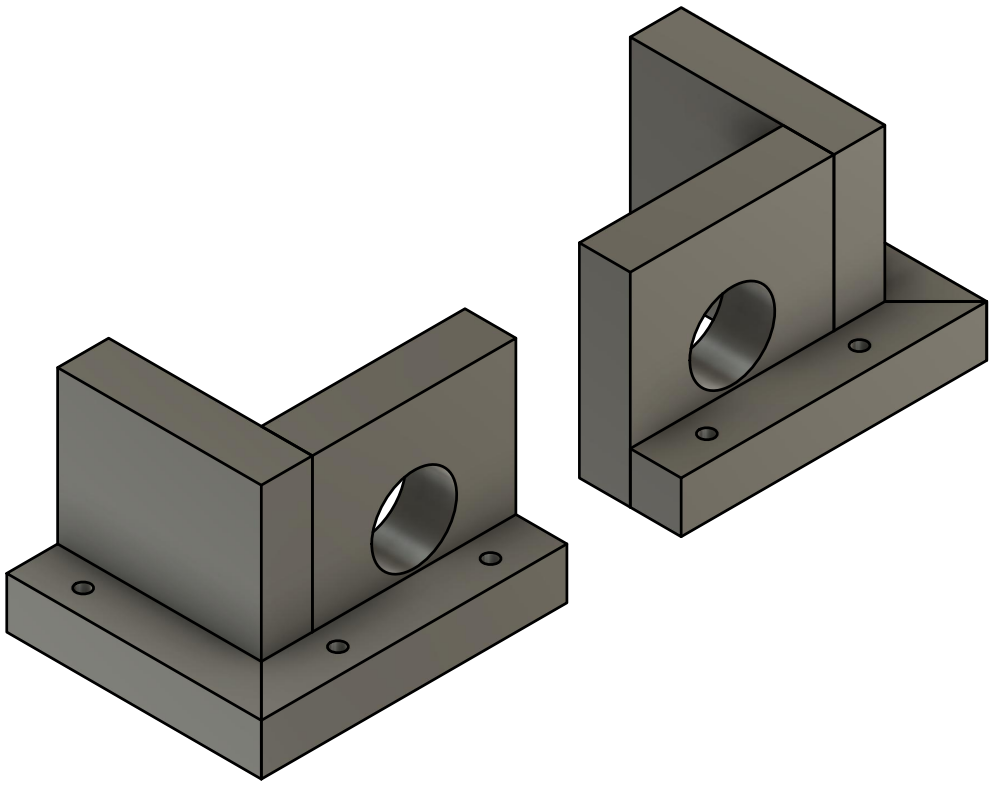

Left & Right Spring Block Assemblies

Following the detail drawings create a left and right spring block as shown above. These blocks mount to the bottom of the bench top and allow the spring to apply light force to the pinions. The 3/4 X 3/4 mounting cleats may be omitted and pocket screws may be used for mounting. The mounting cleats are preferred because the pocket screws tend to skew the mounting blocks when tightened. If you do use pocket screws securely clamp them in place to prevent shifting when tightening the mounting screws. The use of glue to assemble the parts will make the assembly suitably strong.

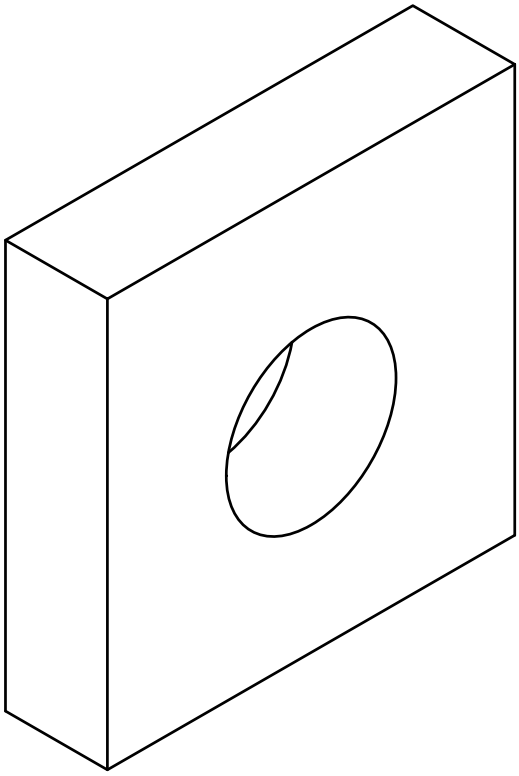

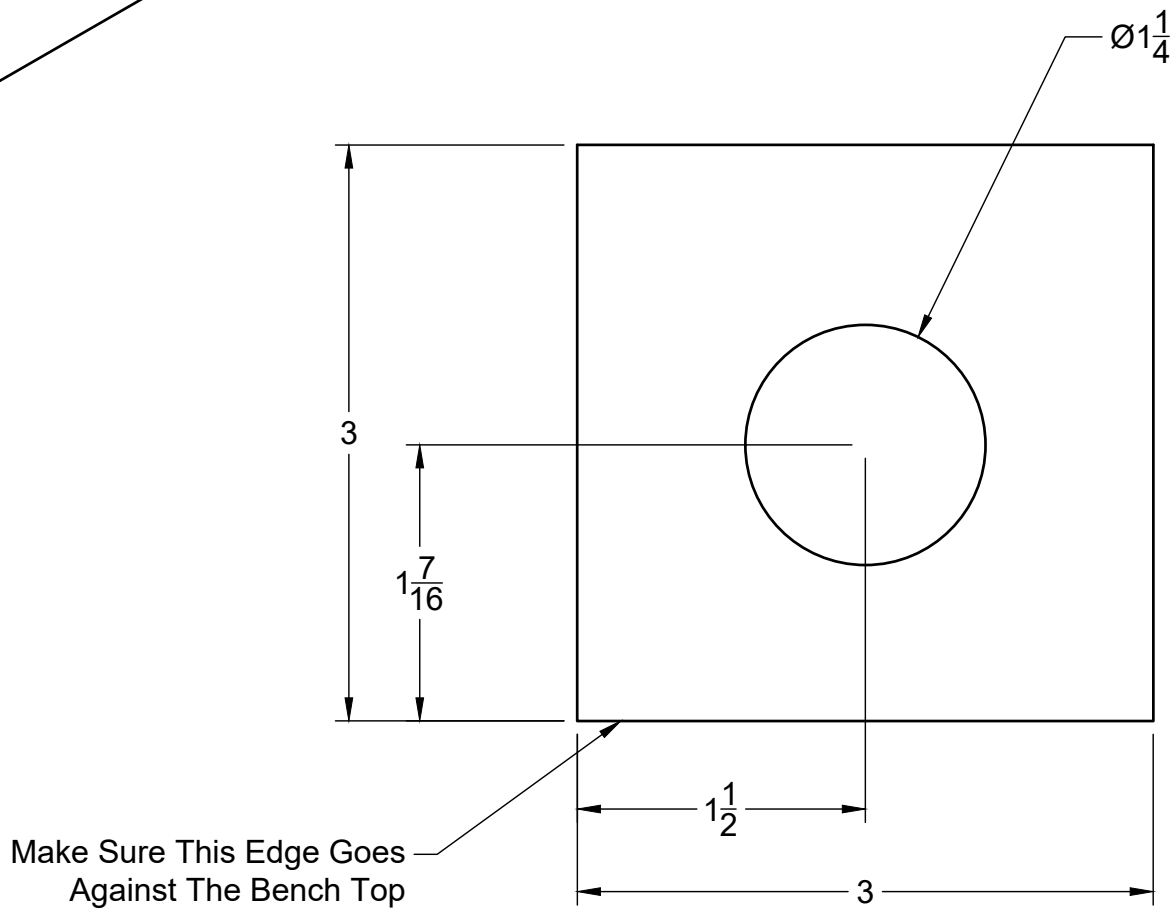

Rear Spring Block - 2 Required

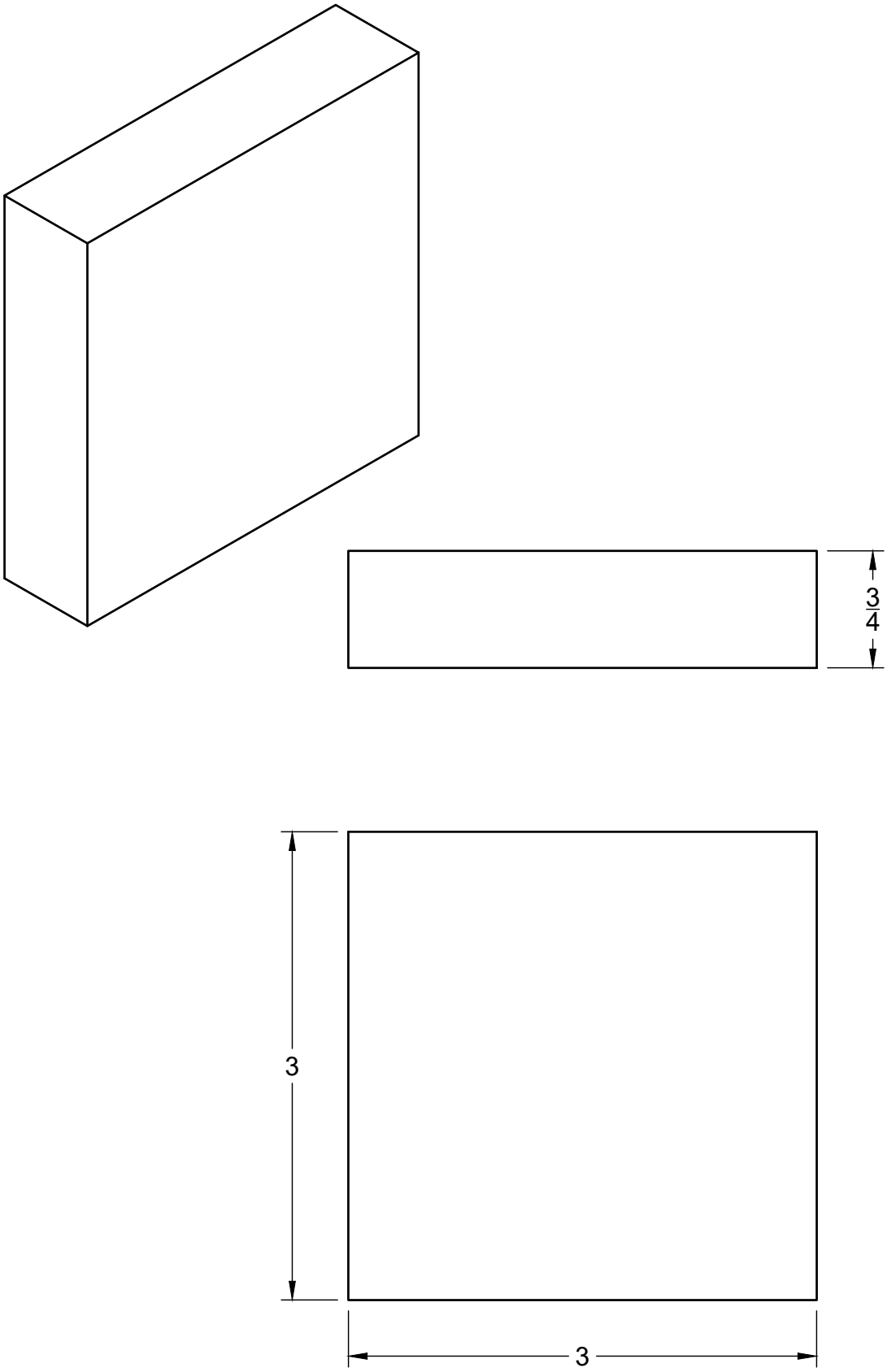

Side Spring Block - 2 Required

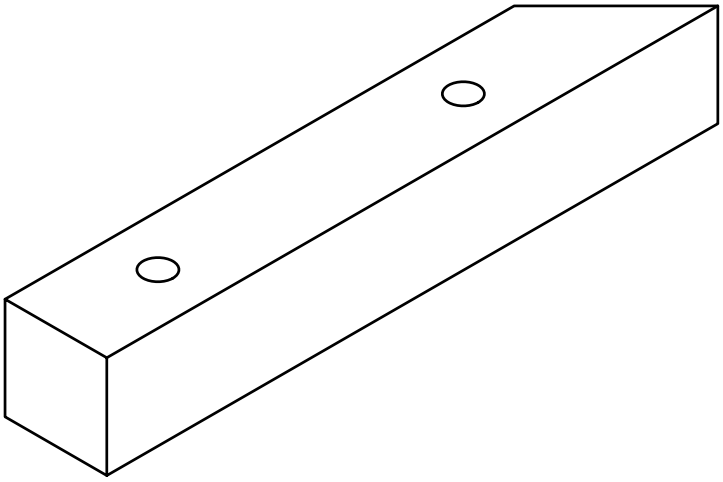

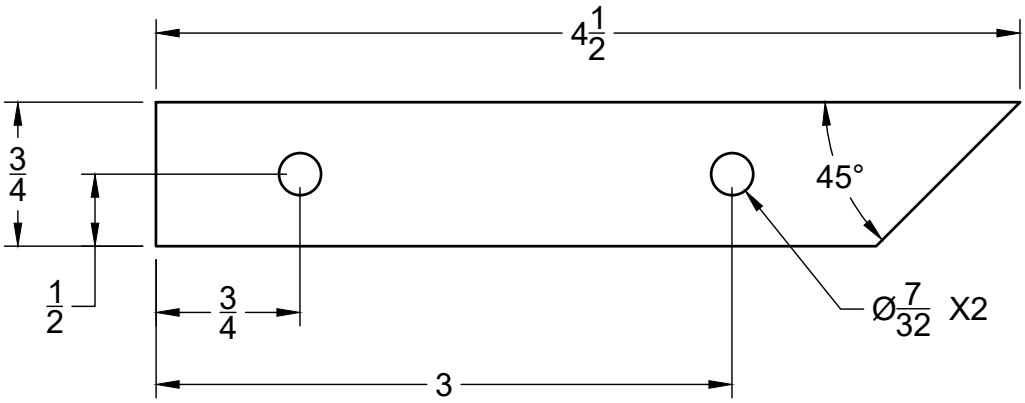

Rear Cleat - 2 Required

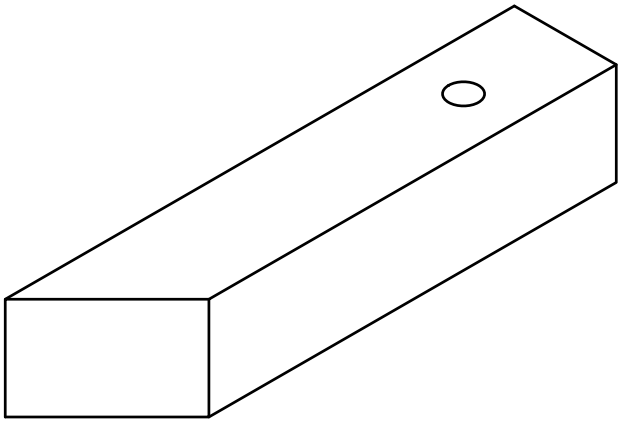

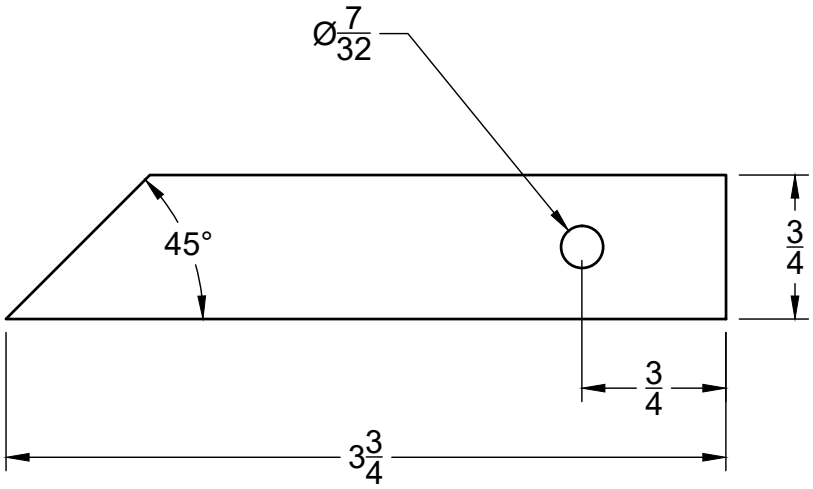

Side Cleat - 2 Required

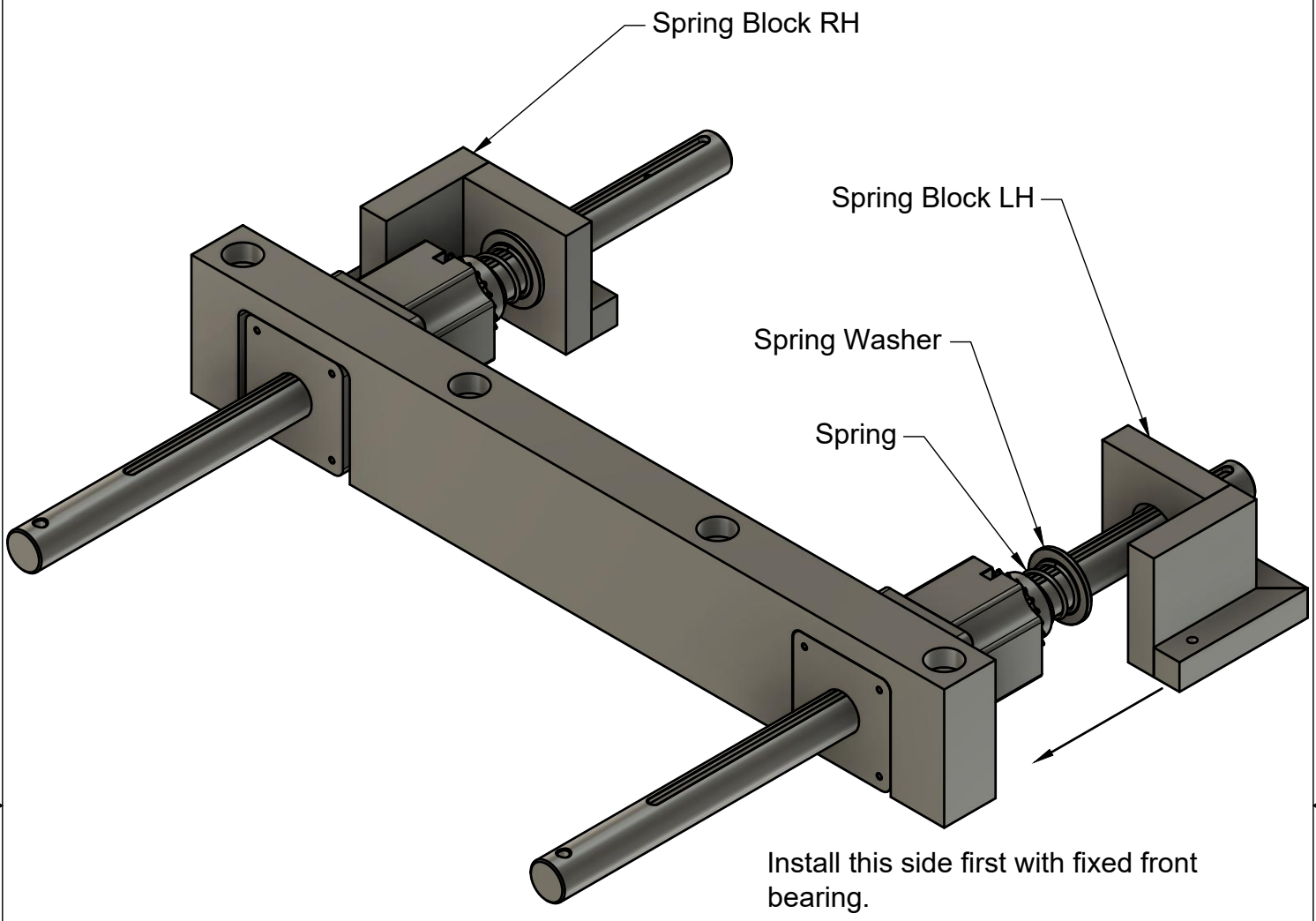

Install a spring onto the shaft that has the fixed Delrin block bearing and slide it into the pocket that is machined into the hub of the sprocket. The small key is trapped and retained by the spring. Next install the spring washer. Make sure the pocket machined into the spring washer is oriented towards the spring. Slide the spring washer against the spring making sure the spring is inside the pocket of the spring washer. Slide the appropriate spring block up against the spring washer. Visually align the hole in the spring block so the clamp shaft is centered within the hole and does not touch it. The spring block should be against the washer and the sprocket should be against the rear bearing protruding from the housing. Don't compress the spring and don't leave a gap between the spring washer and the spring block. When everything is oriented properly attach the spring block to the bottom of the bench top with screws (not included).

Do an initial chain tension to get the other mechanism in its approximate final location by sliding the VX21 mechanism and front bearing block outward to remove most of the chain sag. Ideally there should be about 1/4" to 1/2" of sag at the center of the chain. Tighten the mounting bolts and re-check the sag. If you try to remove all of the sag you will create a force in the sprocket that will cause drag when the clamp shafts are slid in and out. Test the clamp shaft sliding action by sliding them in and out. You will need to manually hold the sprocket and key that doesn't have the spring block installed to test. When you are satisfied with the tensioning, install the spring, spring washer and spring block on the other side.

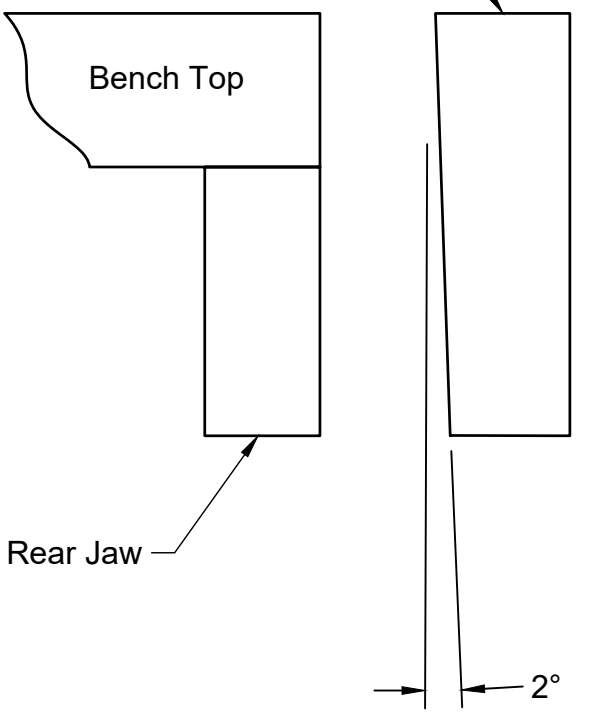

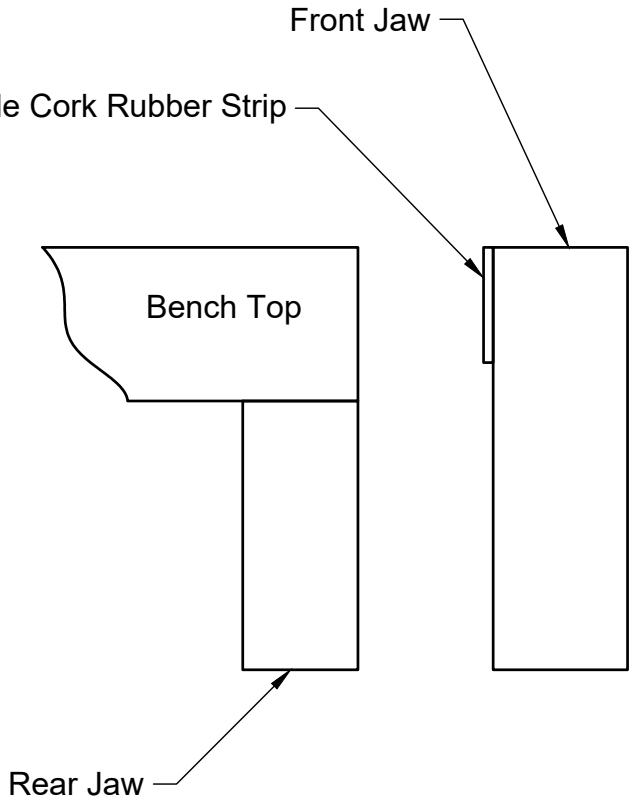

The moveable front jaw should be made after the vise mechanism has been completely assembled and the chain properly tensioned to account for minor variations in center to center distance. Accurately measure the clamp shaft center to center distance and note it for the moveable front jaw layout. The moveable front jaw may be made with a slight taper as shown (above left) to ensure that the vise jaw always contacts at the top first. Wait to cut the taper untill you have completely finished all features of the jaw. An alternative to tapering the inside jaw face is to apply a 1-1-/2" wide strip of cork rubber to the top of the vise jaw as shown (above right). The moveable jaw should be 1-3/4" thick and should be the same width as the rear jaw.It is a good idea to make the jaw a little bit longer and higher than needed and then trim to the correct height after the final fitting has occured.
The moveable jaw height for a face or end mounted vise will be:
Bench top thickness + 3-1/2"

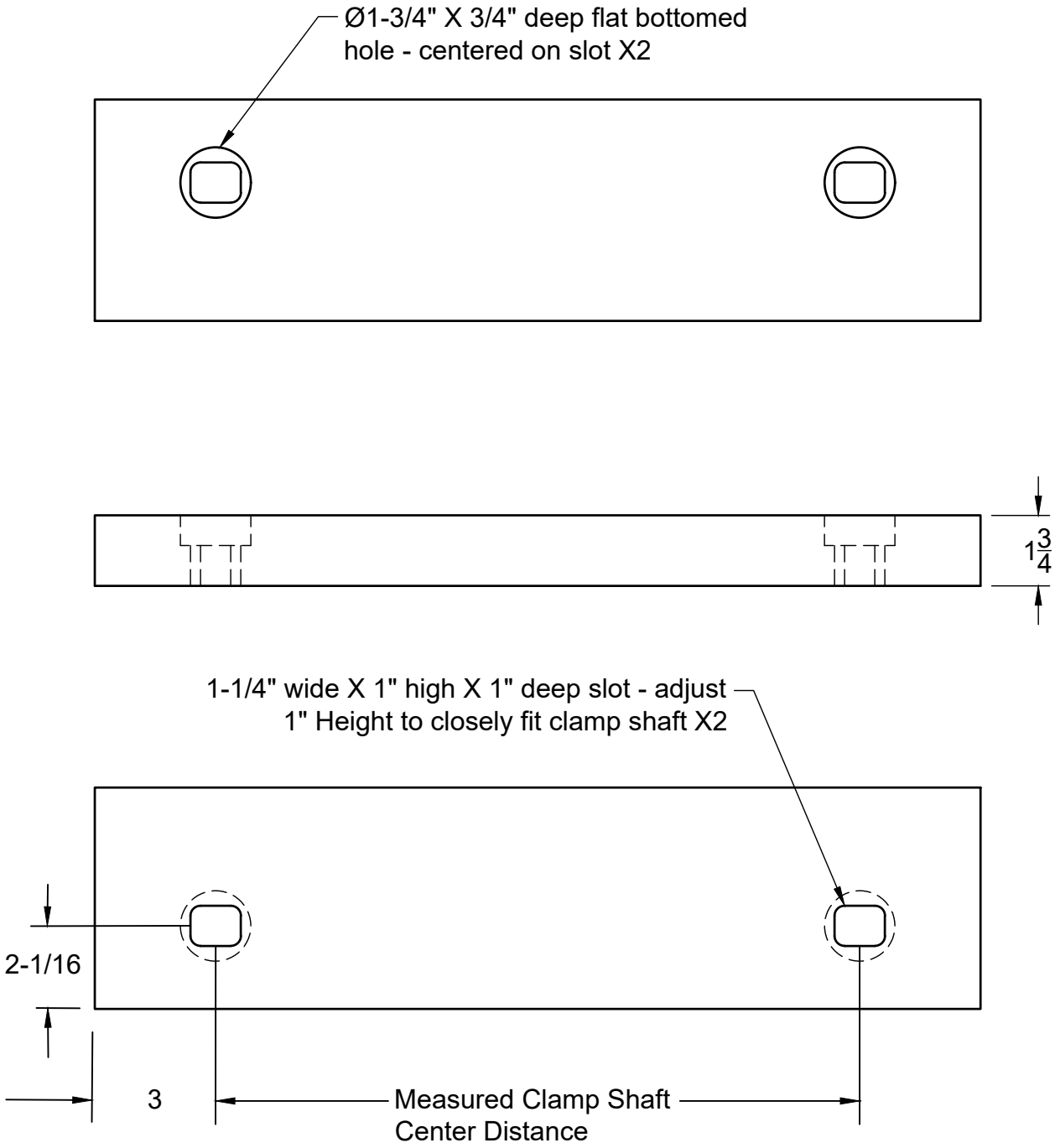

Construct the moveable front jaw according to the above drawing. If you are using the optional slotted bearings the above slots will be replaced with 2-1/2" diameter counter-bores as shown on page 29. To minimize vertical racking use a plunge router with a micro-adjust fence to closely fit the 1" high slot height to the clamp shafts. The 1-1/4" width is not as critical.

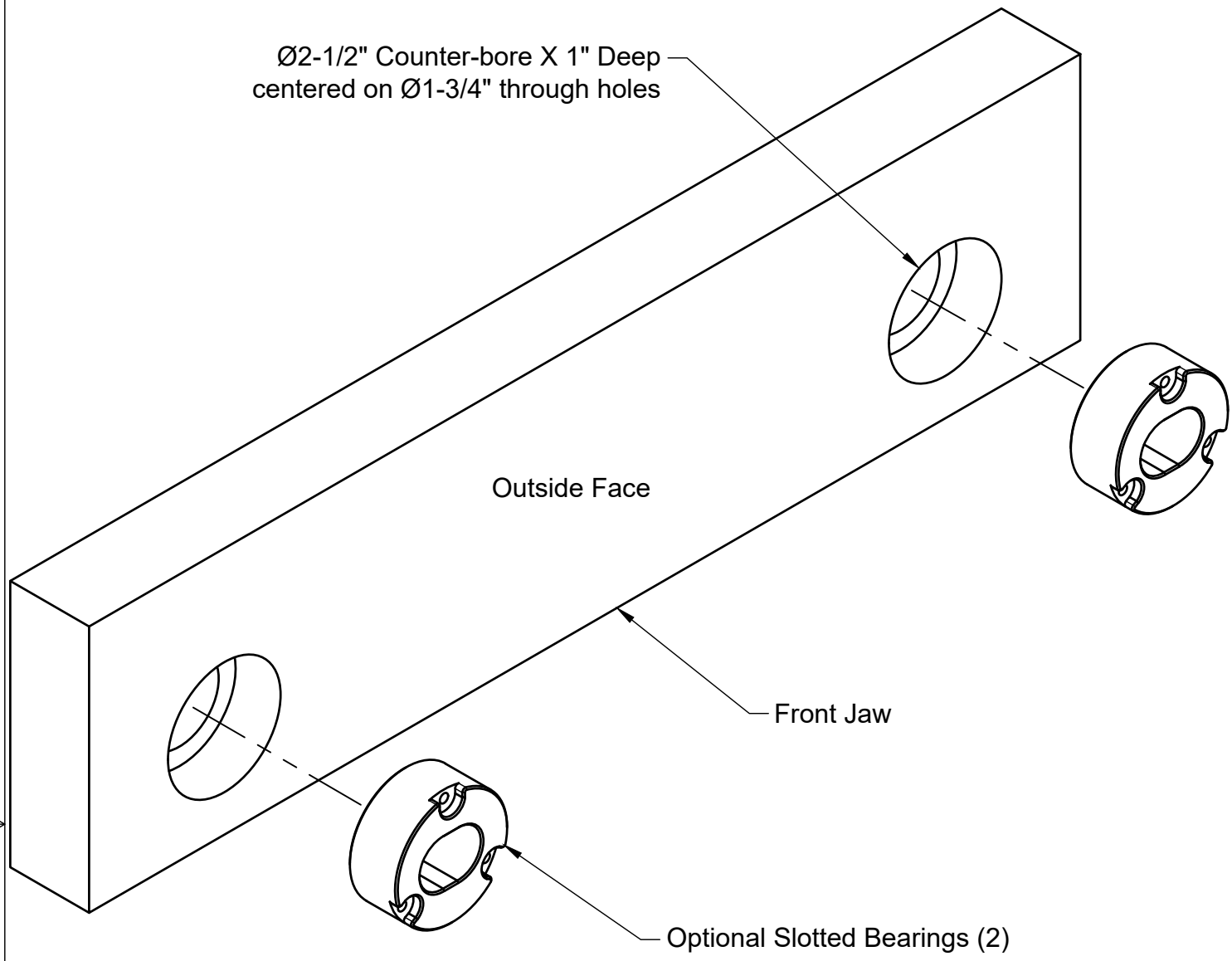

FRONT JAW WITH OPTIONAL SLOTTED BEARINGS

If you purchased the optional slotted bearings, drill 2-1/2" counter-bores on the centers of the 1-3/4" through holes. They should be 1" deep and will replace the 1" high slots shown on the previous drawing. Install the slotted bearings in the counter-bored holes, orient the slots horizontally as shown and using a transfer punch or brad point drill bit, mark the 3 mounting hole locations. Drill the mounting holes with a 1/8" dia. drill bit 5/8" deep. Secure each bearing with three with #8 X 1-1/2" washer head wood screws. NOTE: The bearings protrude out from the front jaw face by 1/16".

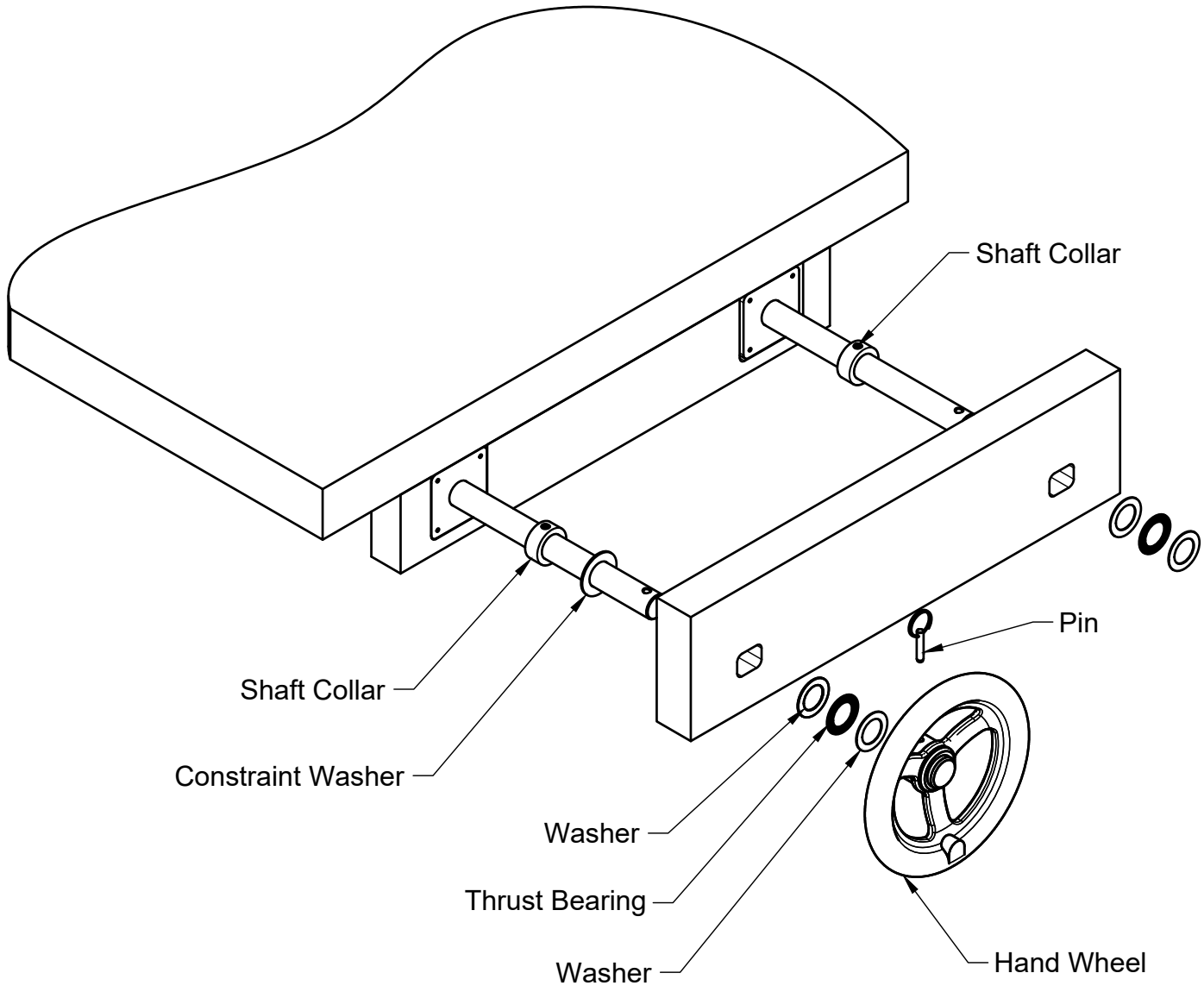

Place a shaft collar on each clamp shaft. Place the constraint washer on the left shaft collar.There is only 1 constraint washer and it will fit inside the 1-3/4" diameter pocket in the back of the vise jaw. Place the front jaw onto the clamp shafts and place the 2 wahsers and thrust bearing on each shaft as shown. Place your choice of hand wheel, wooden hub and handle or single handle cap on each shaft and secure to the shaft with the quick release pin. A smaller ring is supplied with each quick release pin if that is your preference.

Keep the jaw open and slide everything tight against each hand wheel. Push each shaft collar into the pocket on each side and then use a felt tip marker to mark the position of the shaft collars on the clamp shaft. Remove the hand wheels and the bearings and the jaw and then tighten the shaft collars onto the shafts at the marked positions. Re-install everything and make sure that there is not too much play between the hand wheels and the bearings and jaw. Shoot for about 1/64" clearance. You may have to remove and re-adjust if necessary.