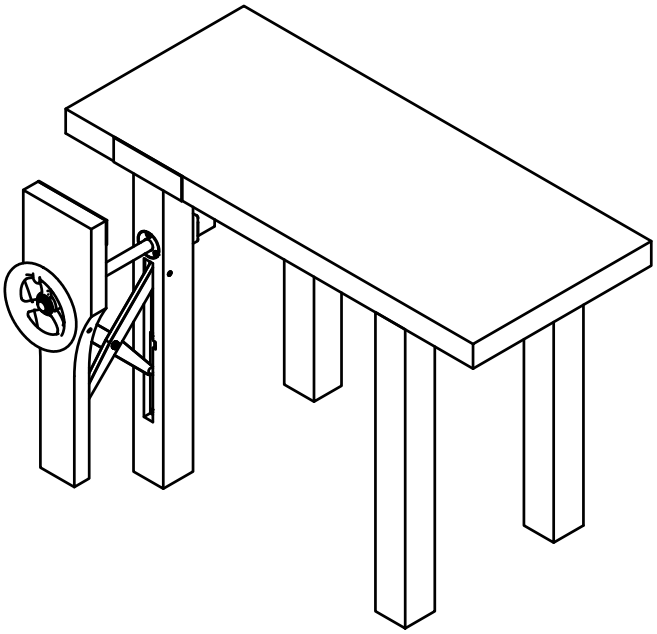

VX21 LEG VISE ASSEMBLY & INSTALLATION DIRECTIONS

NOT ALL ITEMS PICTURED IN ILLUSTRATION ARE INCLUDED

Basic operation of the VX21 mechanism and X Link.

The VX21 mechanism has a keyway slot that accepts a small rectangular steel key which also engages a long keyway slot in the clamp shaft. The rotational force through the handwheel goes through the shaft and the key and rotates the threaded collar in the mechanism. When the clamp shaft is rotated fully counter - clockwise against the internal stop the clamp shaft is unclamped and will slide freely. When attached to the jaw it is simply slid against the work and the clamp shaft is rotated clockwise and an internal clutch automatically grips the clamp shaft and begins to clamp the work. The clamp force can be varied as desired just by varying the force applied to the handle just like a screw operated vise. The VX21 can be rotated approximately 3 turns before it stops. To unclamp rotate the handle counter-clockwise until it stops and the jaw will be free to slide.

To further reduce the amount of force needed to clamp your work the VX21 includes a thrust bearing which greatly reduces the friction force of the handle to the jaw. More of the force you apply goes towards clamping and not fighting friction.

X Link placement on leg and jaw.

The X Link and vise mechanism should be centered on the leg and jaw. The placement of the X Link mortise will be dictated largely on clearance needed at the bottom of the leg for stretchers or rails. The throat (the distance from the top of the bench top to the clamp shaft) of the vise typically is between 8” and 11”. A deeper throat will accommodate wider boards held vertically but a deeper throat also decreases clamping force at the top of the jaws. This applies to any leg vise regardless of the maker.

Jaw & Leg thickness and width.

The jaw should be a minimum of 1-3/4” thick. The smaller dimensions of the X Link mortise create a stronger jaw and allow a thinner and narrower jaw. The jaw should be between 6” and 8” wide. Keep in mind that with the unique sliding motion of the VX21 clamp shaft, a lighter jaw makes it easier to slide in and out.

Alignment of clamp shaft to Delrin bearing.

The VX21 mechanism contains a rear bearing and a front threaded collar. The clamp shaft is additionally supported at the front by the black round Delrin bearing. It is important to follow the alignment procedure in the instructions to make sure the clamp shaft is able to slide freely. Take extra care in drilling all the holes and the placement of the mounting holes. It is important that the bottom of the counter-bore that houses the Delrin bearing is flat and parallel to the rear of the leg where the VX21 mechanism is mounted

Alignment of X Link to clamp shaft.

Care should be taken to precisely place the pivot pin holes relative to the leg and jaw through holes. If the alignment is not correct it may cause binding of the clamp shaft against the through hole in the jaw. If you have a minor mis-alignment you may be able to correct by removing some material from the jaw through hole where the binding is occurring. If it is a major mis-alignment you may have to plug holes and move the through hole.

Shims are provided with the X Link that may be added under the jaw wear plate to allow the top of the jaws to contact before the bottom of the jaws. This is known as “toe in”. With proper toe in, clamping begins near the top of the jaws and full clamping occurs when the jaws are essentially parallel.

Maintenance

Clamp shaft - No need for oil or wax, just keep clean using alcohol. The use of some types of oil or wax may cause mechanism slippage.

Needle Thrust Bearing - Occasionally lubricate with a drop or two of light machine oil like sewing machine oil or hair clipper oil. Inspect and clean annually if necessary.

X Link shoulder bolt pivot - Occasionally lubricate with a drop or two of light machine oil.

X Link wear plates - Occasionally add a small amount of grease. Inspect and clean annually if necessary.

VX21 mechanism - Internal grease will not break down due to usage. The grease will oxidize over time and need to be replaced. We estimate a ten-year life on the grease but this could vary based on environmental conditions. Grease is replaced by removing and dis-assembling the mechanism. Contact us prior to dis-assembly.

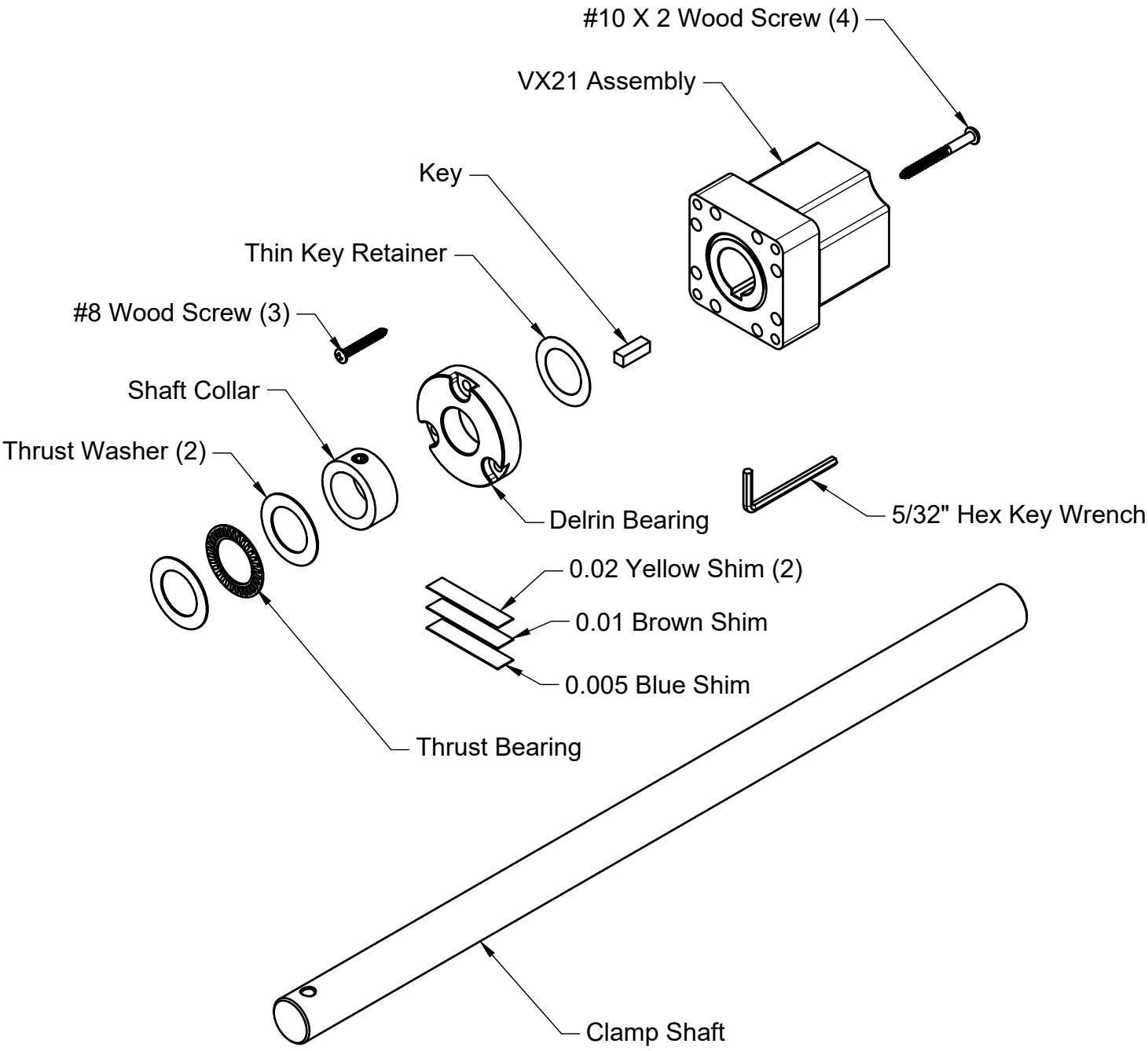

The above parts are included with the VX21 leg vise hardware purchase. All parts except the clamp shaft are packaged together in a small box. Please contact us if you find anything missing.

X LINK OPTION:

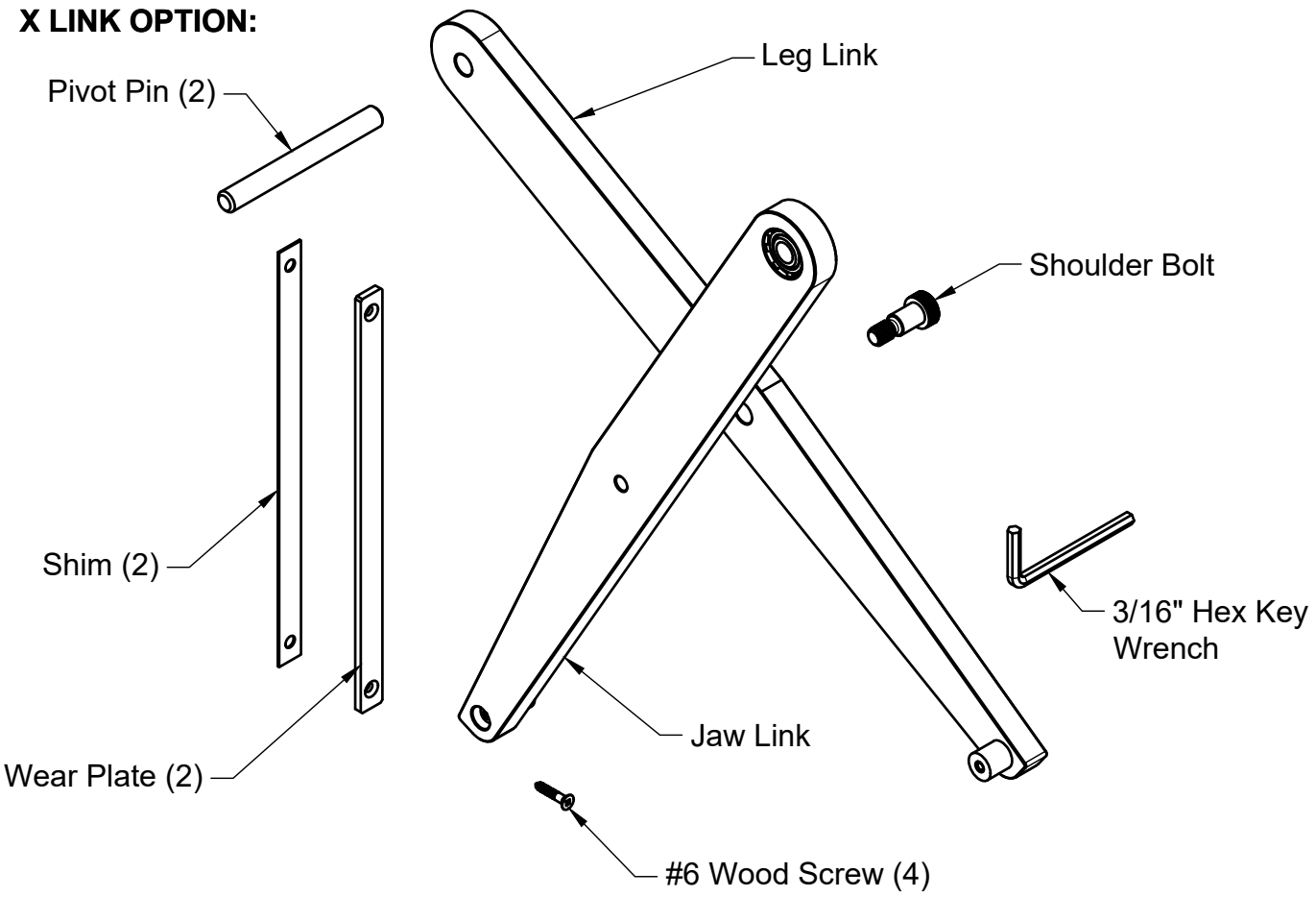

X LINK PLUS DRILL GUIDE OPTION:

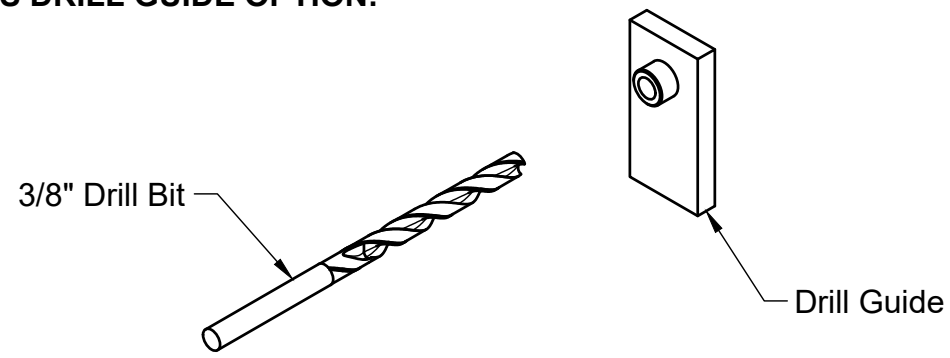

The components shown at the top are included with the X Link option purchase. The components shown at the top and the drill bit and drill guide, shown at the bottom are included in the X Link plus drill guide option purchase. Please contact us if you find anything missing.

Handle Options

8" Dia. Round Profile Polished
Rim Metal Handwheel

Wooden Hub and Handle

8" Dia. Square Profile Turned
Rim Metal Handwheel

DELRIN BEARING TEMPLATE:

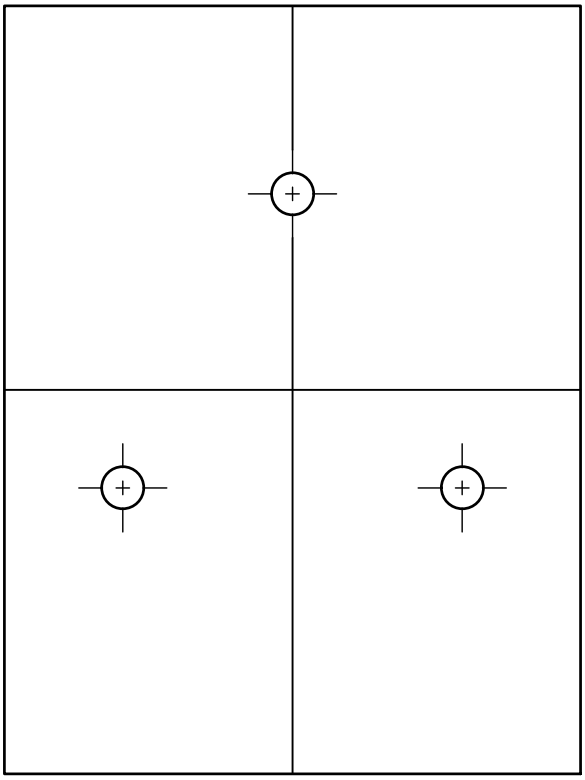

CHECK SCALE - BOXES ARE 3 INCHES WIDE BY 4 INCHES HIGH
SET PRINTER SCALE TO FULL SIZE 100%

LEG VISE HOUSING MOUNTING TEMPLATE:

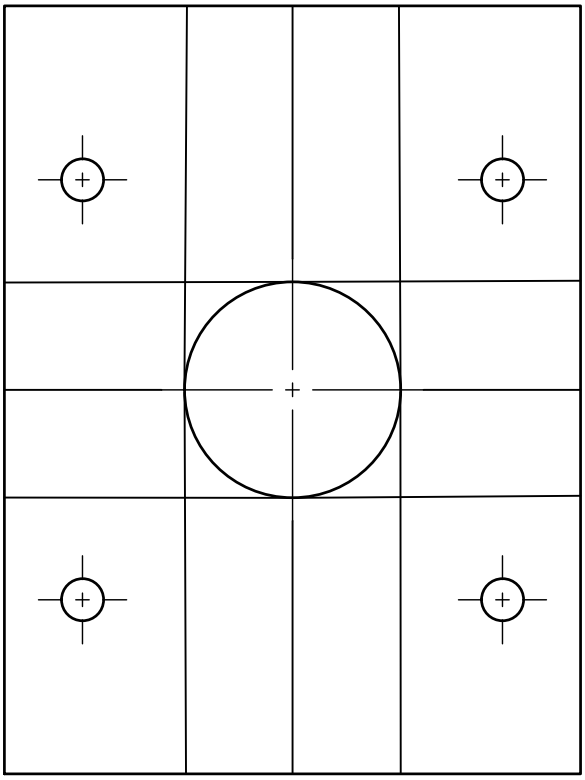

The following steps require the holes to be placed with an accuracy of 1/32". The use of paper templates is an excellent way to achieve this. As an option the hole positions may also be transfered directly from the parts using a transfer punch.

Using the leg layout drawing, determine where the Delrin bearing needs to be positioned and mark the center lines.

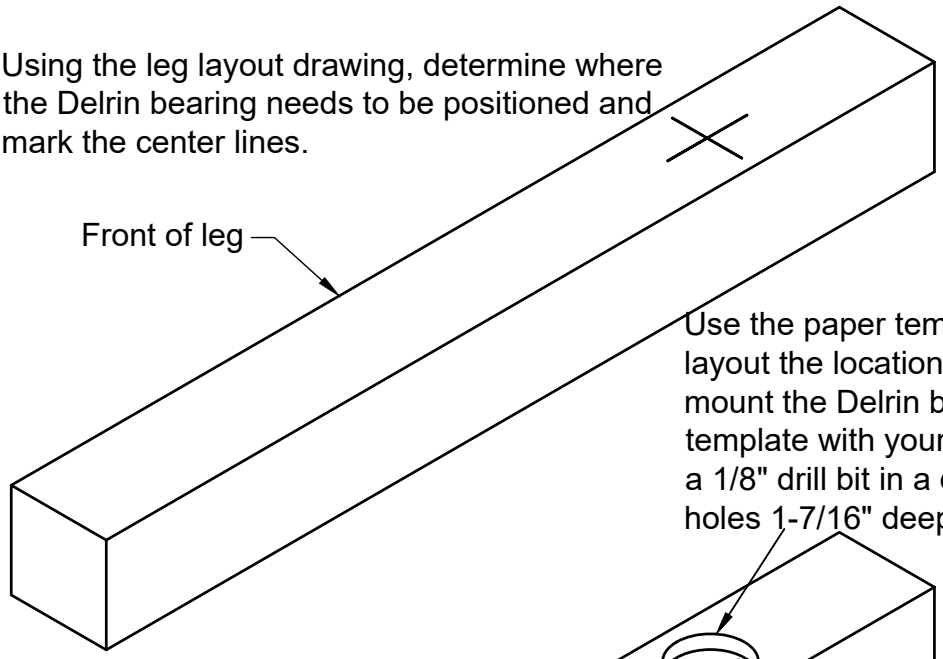

Use the paper templet on page 6 to layout the locations of the 3 holes to mount the Delrin bearing. Align the template with your layout lines. With a 1/8" drill bit in a drill press drill the 3 holes 1-7/16" deep.

After drilling the 3 mounting holes, use a 2-1/2" Forstner bit in a drill press to drill the counter-bore 1/2" deep. Switch to a 1-1/8" Forstner bit and drill through the leg on the center point of the counter-bore.

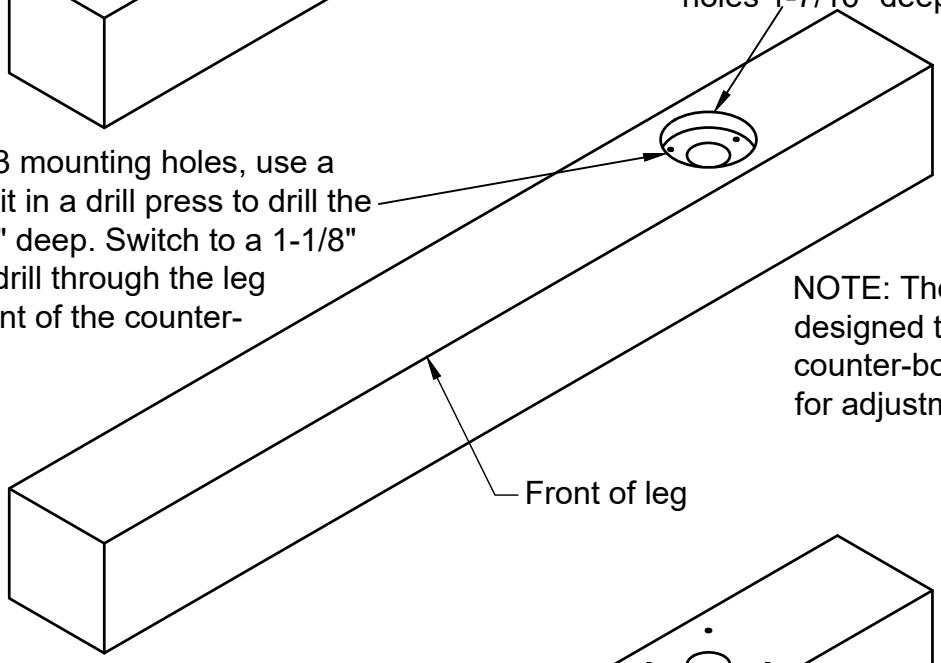

NOTE: The Delrin bearing is designed to fit loosely in the counter-bored hole to allow for adjustment.

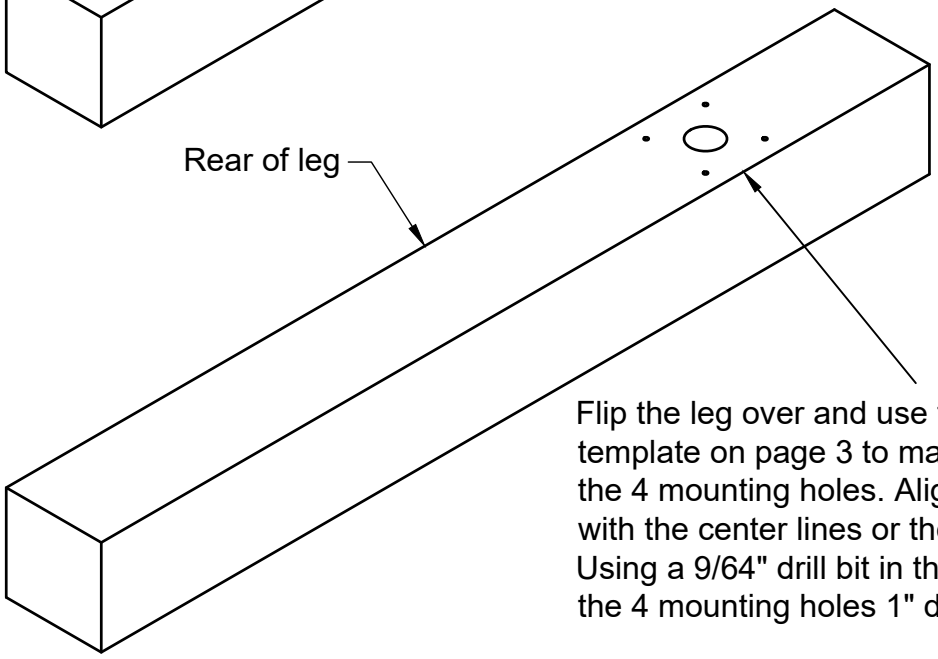

Flip the leg over and use the paper template on page 3 to mark the locations of the 4 mounting holes. Align the template with the center lines or the hole edge lines. Using a 9/64" drill bit in the drill press, drill the 4 mounting holes 1" deep.

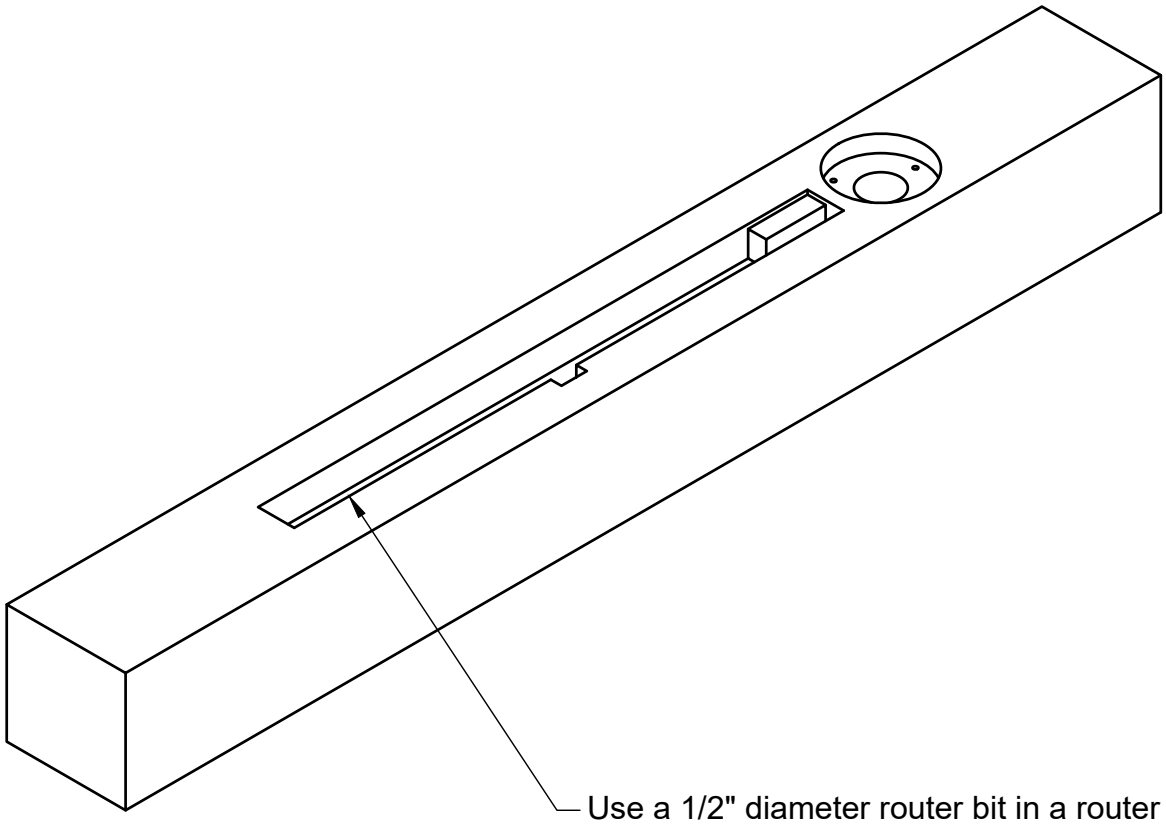

Use a 1/2" diameter router bit in a router equipped with a fence and route out the stepped mortise according to the jaw layout drawing. Use a chisel to square off the corners.

Use the dimensions from the pivot hole layout drawing to mark the center point of the pivot pin. Using a drill press with a 3/8" diameter long drill bit drill completely through the leg. If you have the optional drill guide skip to the directions below.

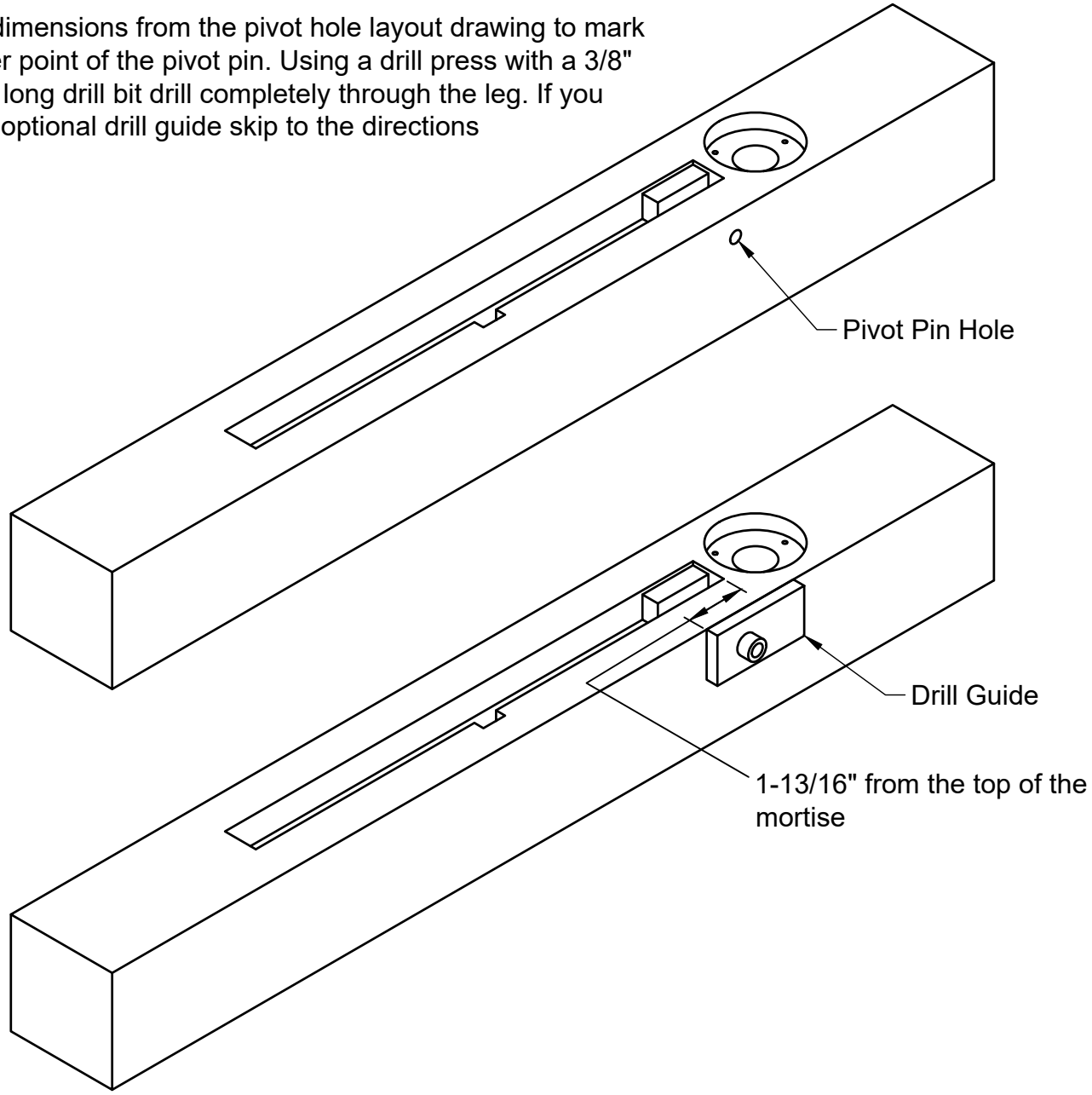

If you use the optional drill guide to drill the pivot pin hole it may be necessary to drill the hole from opposite sides depending on how wide the leg is. The holes drilled from opposite sides may not line up perfectly, but this will be acceptable because the pin will be installed from the first side and the opposite side will be used to drive the pin out if needed. Clamp the drill guide in place as shown above. For convenience the center of the drill bushing is located 1" from the end of the guide and 3/4" from either side. Just place it flush with the face and 1-13/16" from the top of the mortise. When drilling, retract the drill bit often to clear chips. Drill as deep as you can until the drill chuck bottoms against the drill guide. Drill to a minimum depth of 1-1/2" past the center line of the jaw. If you are unable to drill completely through mark this side so you can make sure to install the pin from this side only.

If you can't drill all the way through from the first side, remove the drill guide and align and clamp it to the other side. Drill until you meet the first drilled hole.

Refer to the jaw layout drawing and mark the position of the counterbore and through hole on the rear of the jaw. Transfer this location to the front of the jaw. With a 1-3/4" diameter Forstner bit drill a 5/8" deep counterbore on the rear of the jaw. Flip the jaw over and drill a 1/8" deep counterbore on the transfered location.. After drilling both counterbores, drill a 1-1/8" through hole centered on the rear counterbore.

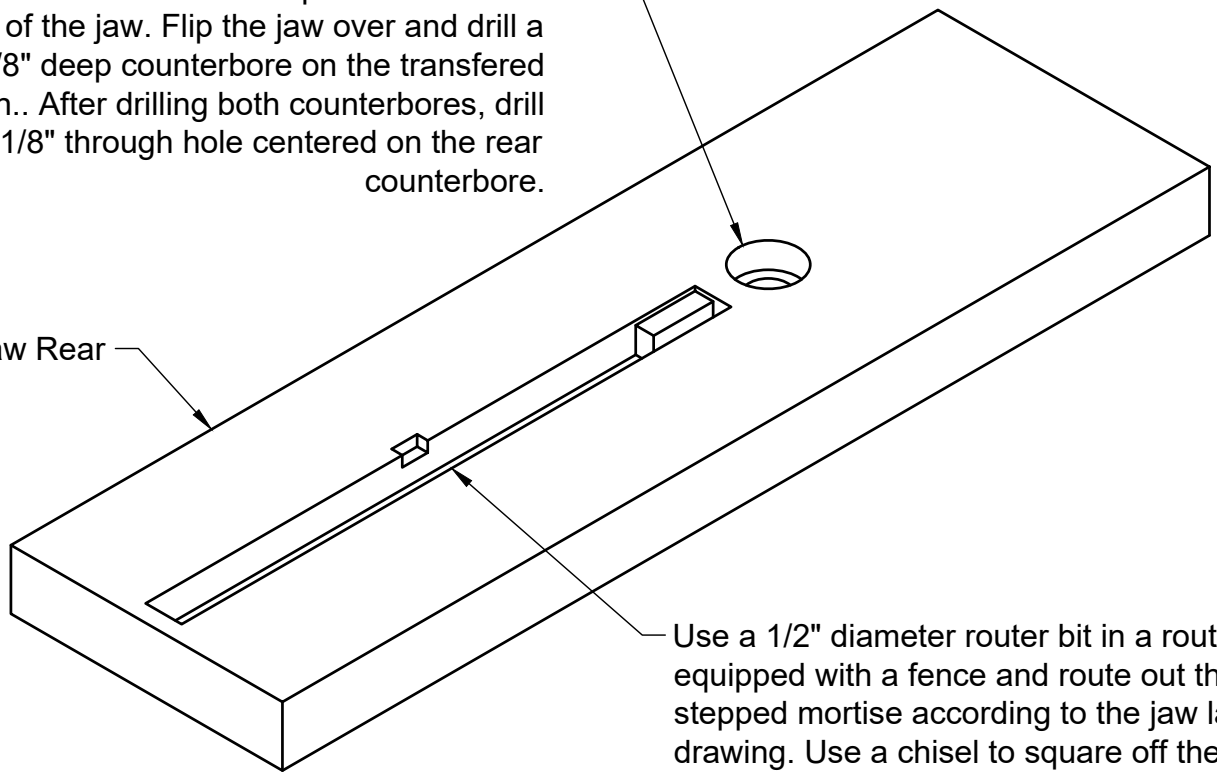

Use a 1/2" diameter router bit in a router equipped with a fence and route out the stepped mortise according to the jaw layout drawing. Use a chisel to square off the corners.

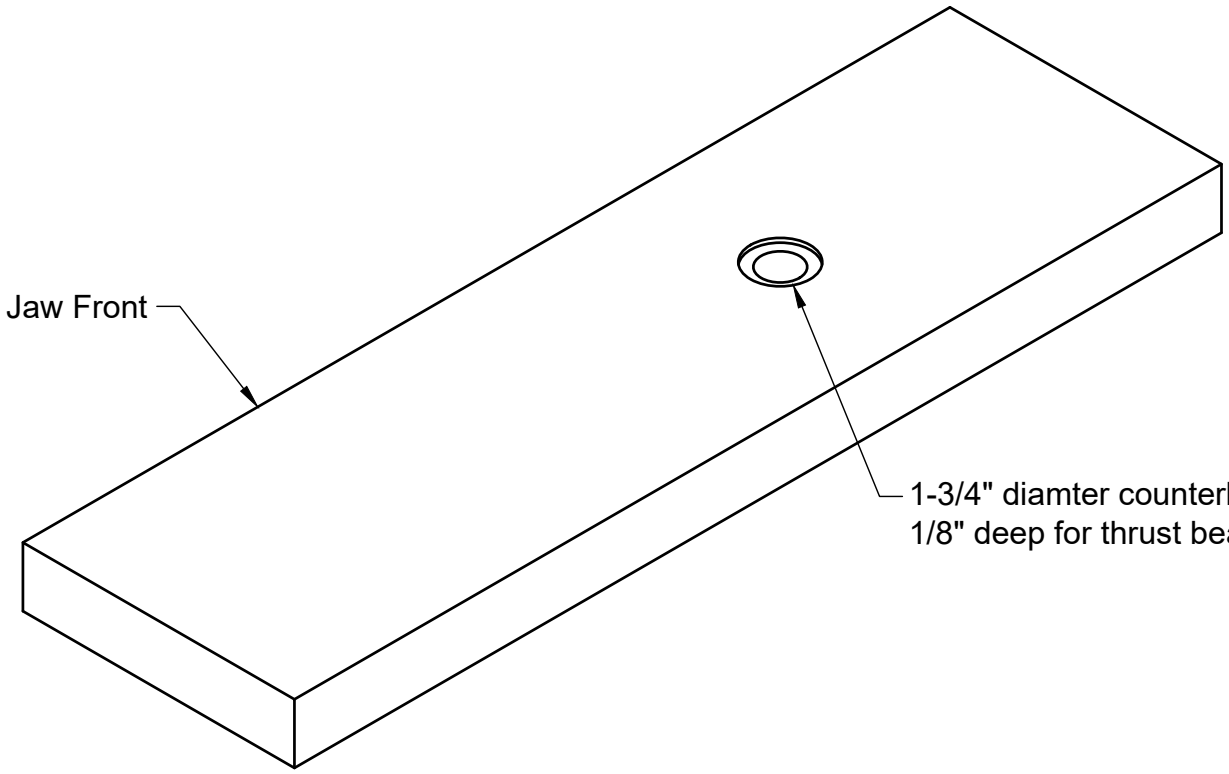

1-3/4" diamter counterbore X 1/8" deep for thrust bearing.

Use the dimensions from the pivot hole layout drawing to mark the center point of the pivot pin. Using a drill press with a 3/8" diameter long drill bit drill completely through the jaw. If you have the optional drill guide skip to the directions below.

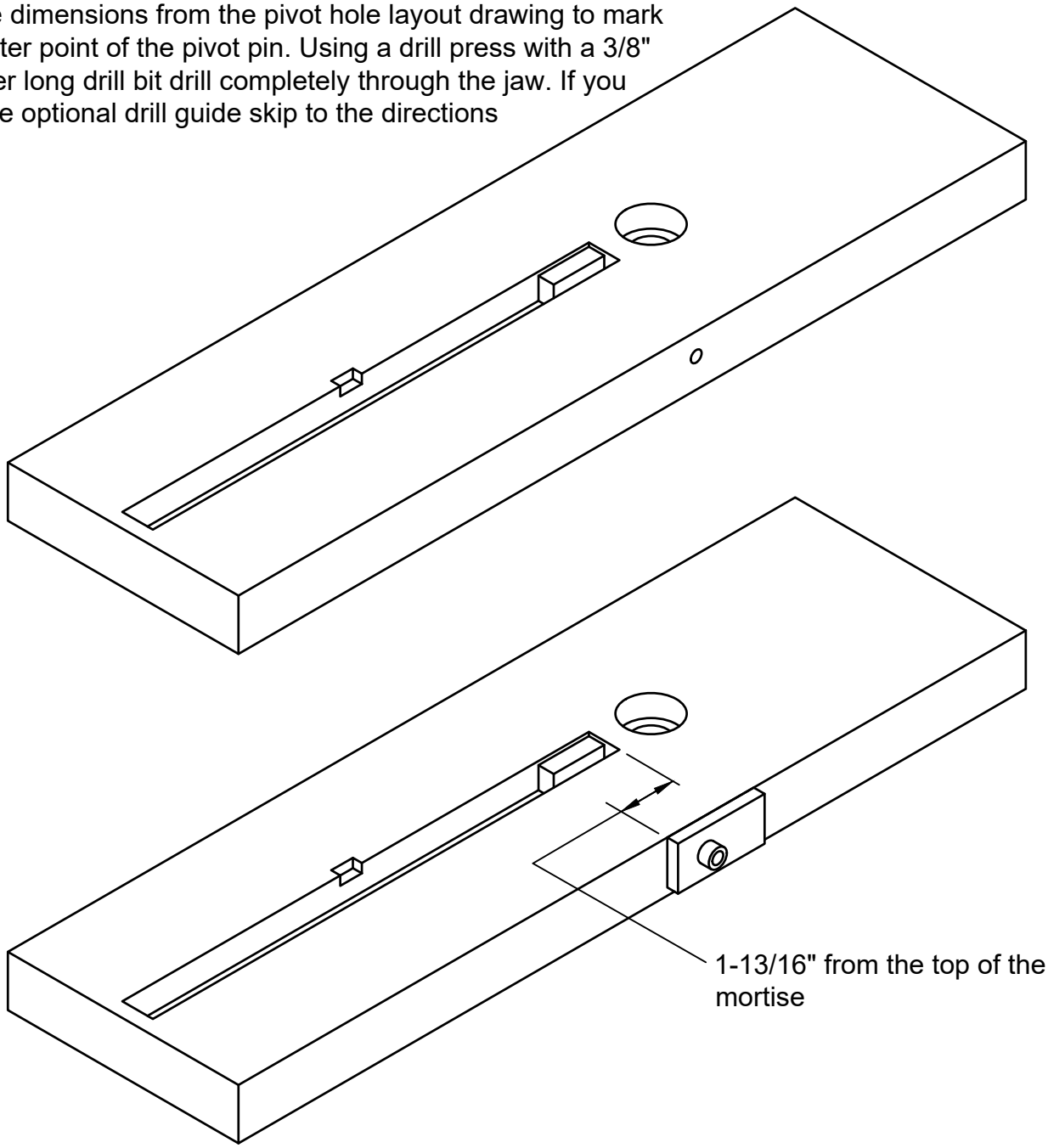

If you use the optional drill guide to drill the pivot pin hole it may be necessary to drill the hole from opposite sides depending on how wide the jaw is. The holes drilled from opposite sides may not line up perfectly, but this will be acceptable because the pin will be installed from the first side and the opposite side will be used to drive the pin out if needed. Clamp the drill guide in place as shown above. For convenience the center of the drill bushing is located 1" from the end of the guide and 3/4" from either side. Just place it flush with the face and 1-13/16" from the top of the mortise. When drilling, retract the drill bit often to clear chips. Drill as deep as you can until the drill chuck bottoms against the drill guide. Drill to a minimum depth of 1-1/2" past the center line of the jaw. If you are unable to drill completely through mark this side so you can make sure to install the pin from this side only.

If you can't drill all the way through from the first side, remove the drill guide and align and clamp it to the other side. Drill until you meet the first drilled hole.

You may now shape the jaw as desired.

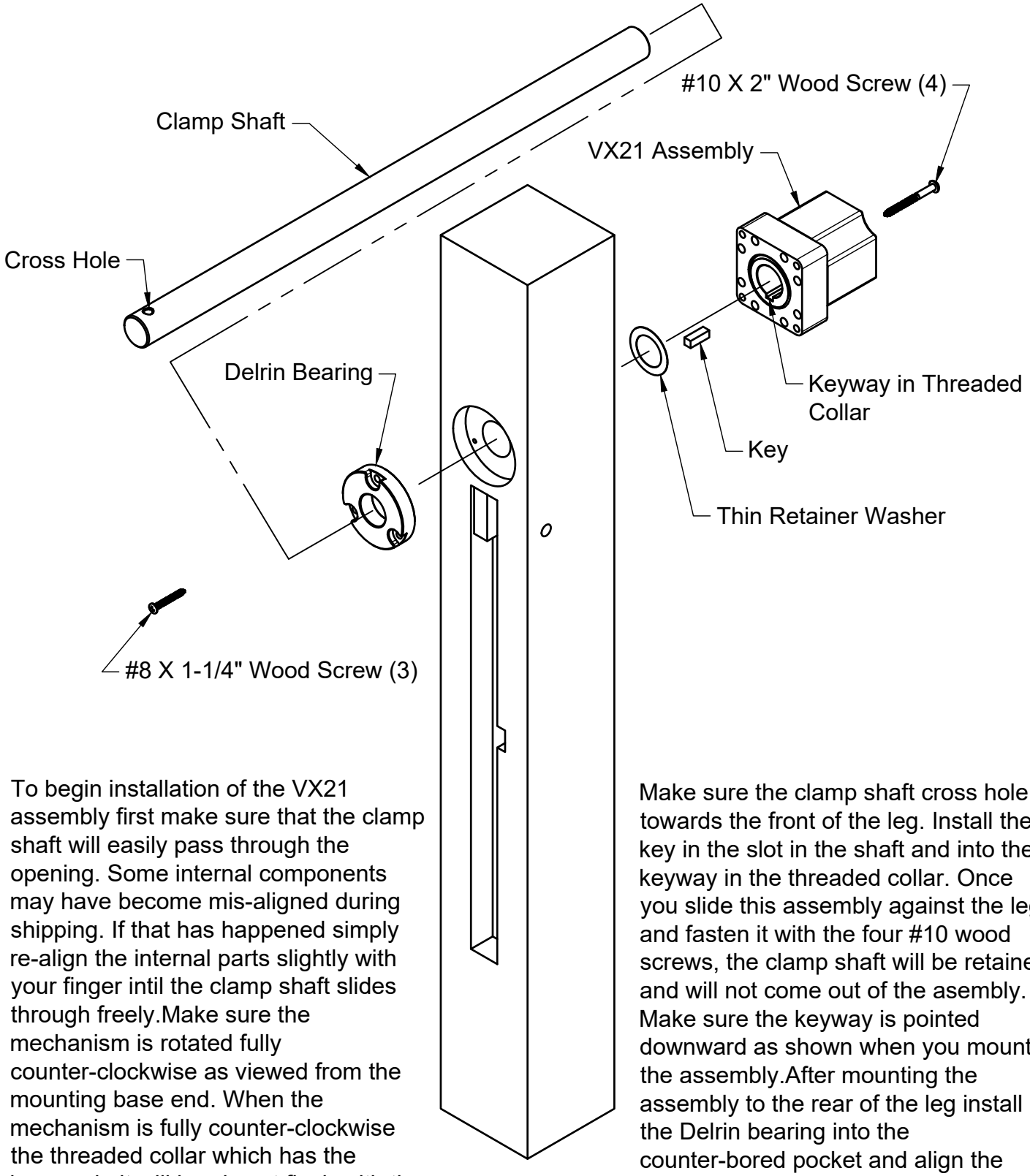

To begin installation of the VX21 assembly first make sure that the clamp shaft will easily pass through the opening. Some internal components may have become mis-aligned during shipping. If that has happened simply re-align the internal parts slightly with your finger intil the clamp shaft slides through freely.Make sure the mechanism is rotated fully counter-clockwise as viewed from the mounting base end. When the mechanism is fully counter-clockwise the threaded collar which has the keyway in it will be almost flush with the mounting base and the keyway will be aligned with the slot machined in the back of the orange anodized housing. Insert the clamp shaft through the leg and then through the thin retainer washer and through the housing.

Make sure the clamp shaft cross hole is towards the front of the leg. Install the key in the slot in the shaft and into the keyway in the threaded collar. Once you slide this assembly against the leg and fasten it with the four #10 wood screws, the clamp shaft will be retained and will not come out of the asembly. Make sure the keyway is pointed downward as shown when you mount the assembly.After mounting the assembly to the rear of the leg install the Delrin bearing into the counter-bored pocket and align the three mounting holes. Install the three #8 mounting screws but leave them slightly loose so that the Delrin bearing is able to be moved around in the pocket for alignment.

Place shims under the Delrin bearing to align the bearing. The shims come in various sizes to move the bearing up or down as needed. Install shims and test the sliding action of the clamp shaft. When the clamp shaft slides freely without a lot of resistance you have good alignment. Tighten the mounting screws and double check that you have free movement of the clamp shaft.

Install one of the wear plates at the bottom of the 7/8" deep left mortise using the #6 X 3/4" flat head wood screws. Pre-drill with a 7/64" diameter drill bit..

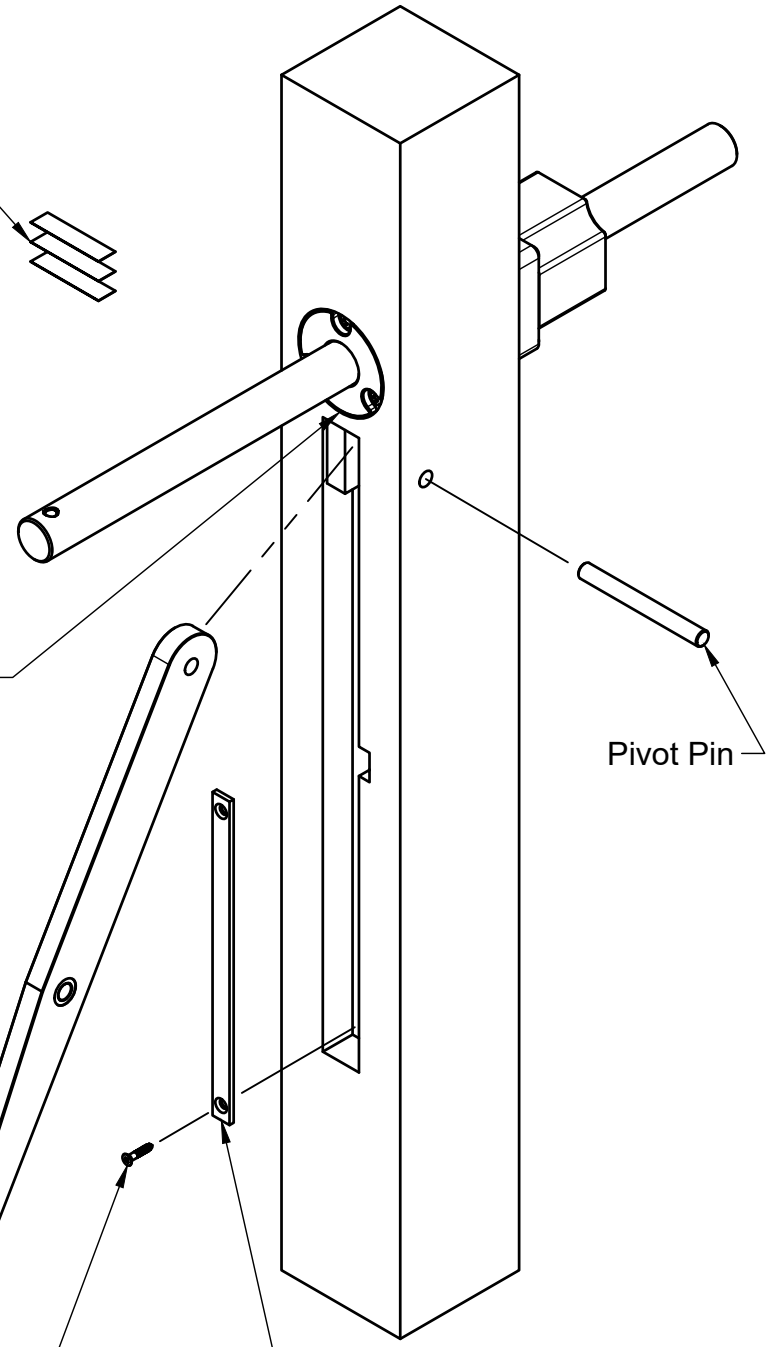

Find the leg link. It has a 3/8" hole at the top (no spherical bearing) and a 3/8" hole in the middle with a spot face. Orient this link so the small radius at the bottom faces out as ahown. Align the top hole with the drilled pivot pin hole in the leg and tap the 3/8" diameter pivot pin through the leg link top hole. Make sure the pivot pin is inserted at least 1" past the link. It may be necessary to use a 1/4" diameter pin punch or rod to fully insert the pivot pin. Note: The aluminum spacer at the bottom of the link keeps the jaw link aligned. The small radius at the bottom of the leg link will slide against the wear plate in the jaw.

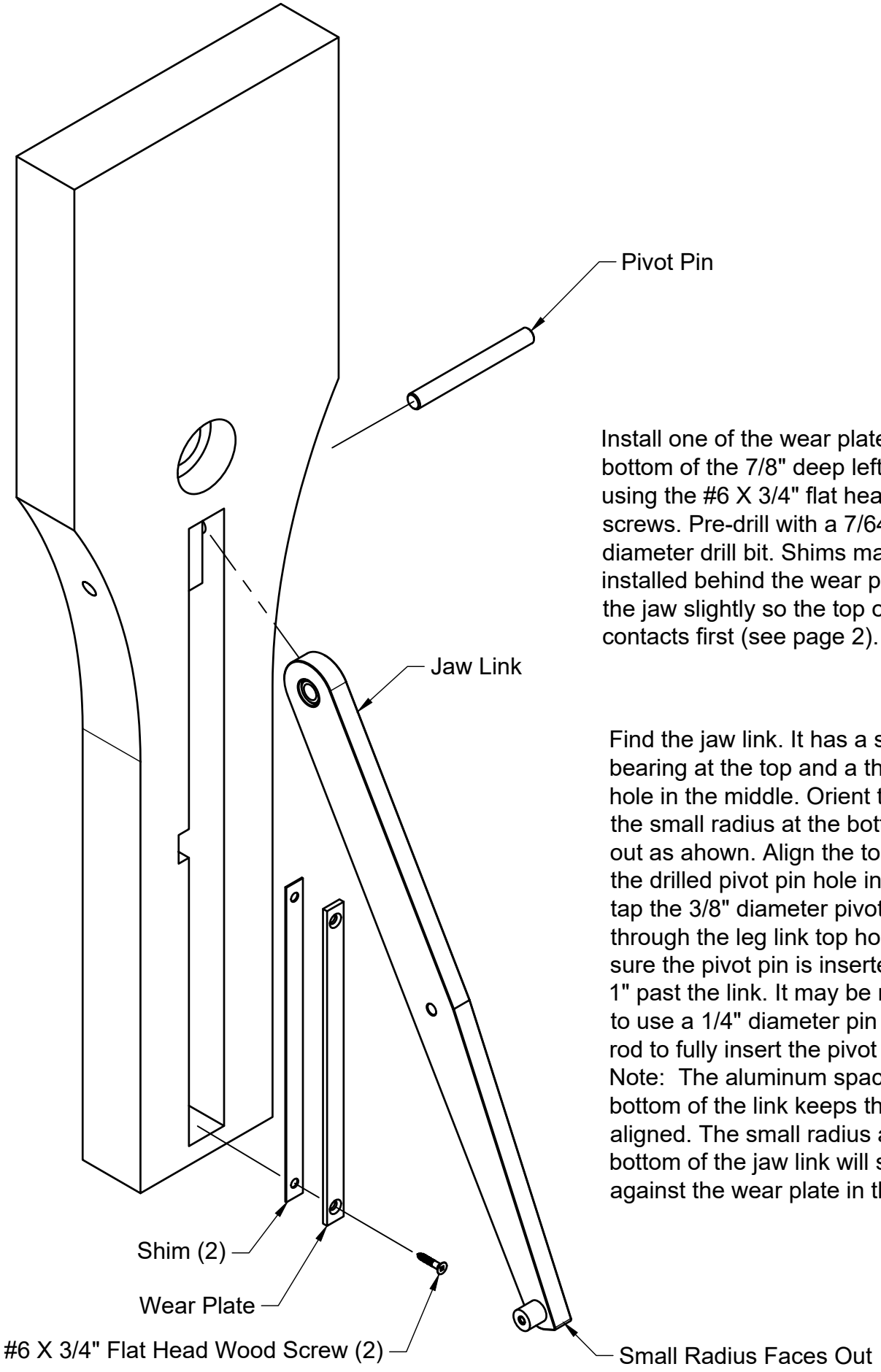

Install one of the wear plates at the bottom of the 7/8" deep left mortise using the #6 X 3/4" flat head wood screws. Pre-drill with a 7/64" diameter drill bit. Shims may be installed behind the wear plate to tilt the jaw slightly so the top of the jaw contacts first (see page 2).

Find the jaw link. It has a spherical bearing at the top and a threaded hole in the middle. Orient this link so the small radius at the bottom faces out as ahown. Align the top hole with the drilled pivot pin hole in the leg and tap the 3/8" diameter pivot pin through the leg link top hole. Make sure the pivot pin is inserted at least 1" past the link. It may be necessary to use a 1/4" diameter pin punch or rod to fully insert the pivot pin.
Note: The aluminum spacer at the bottom of the link keeps the leg link aligned. The small radius at the bottom of the jaw link will slide against the wear plate in the jaw.

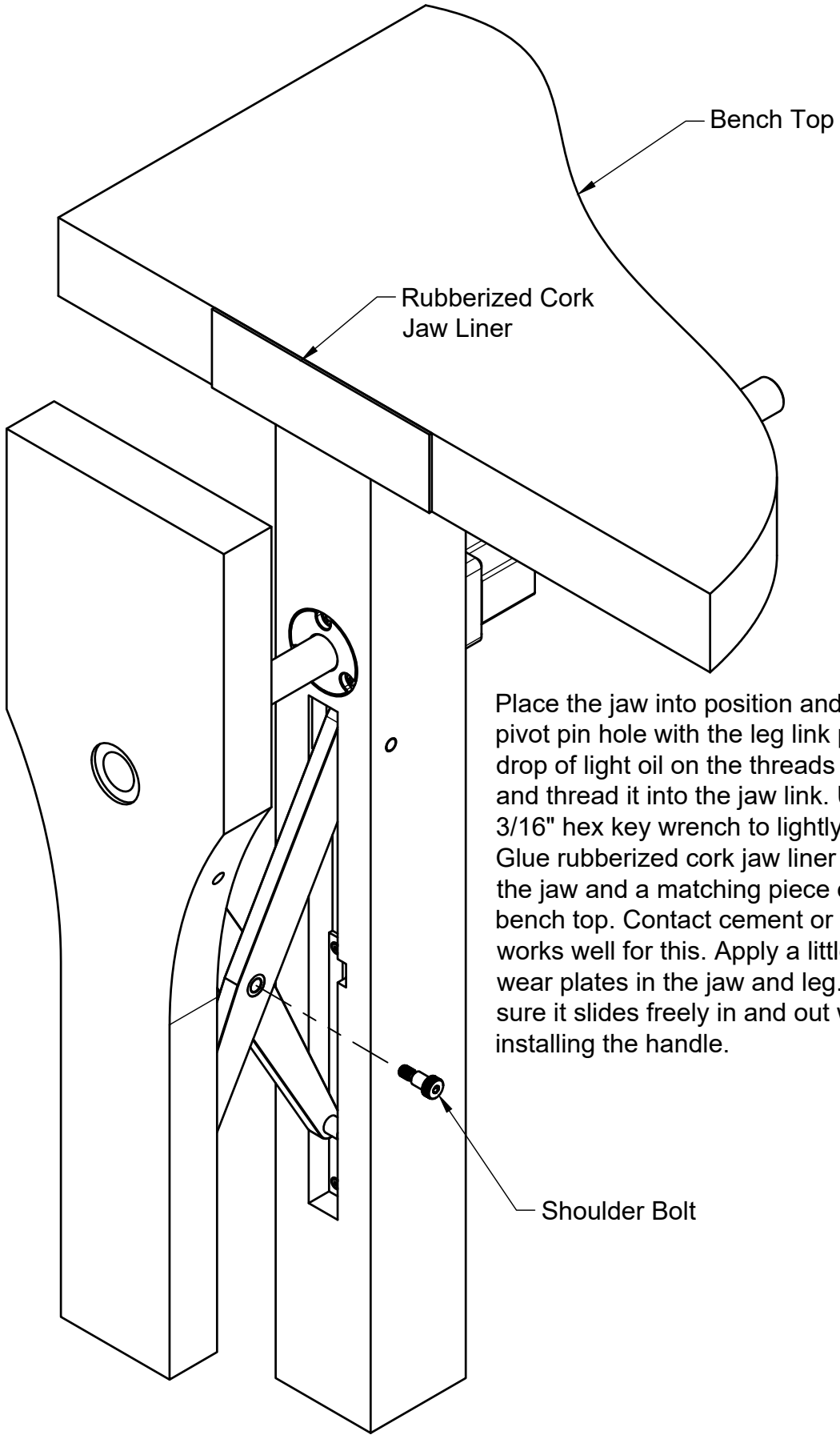

Place the jaw into position and align the jaw link pivot pin hole with the leg link pivot pin hole. Put a drop of light oil on the threads of the shoulder bolt and thread it into the jaw link. Use the included 3/16" hex key wrench to lightly tighten.
Glue rubberized cork jaw liner to the inside face of the jaw and a matching piece on the edge of the bench top. Contact cement or regular wood glue works well for this. Apply a little bit of grease to the wear plates in the jaw and leg. Test the jaw to make sure it slides freely in and out with no binding before installing the handle.

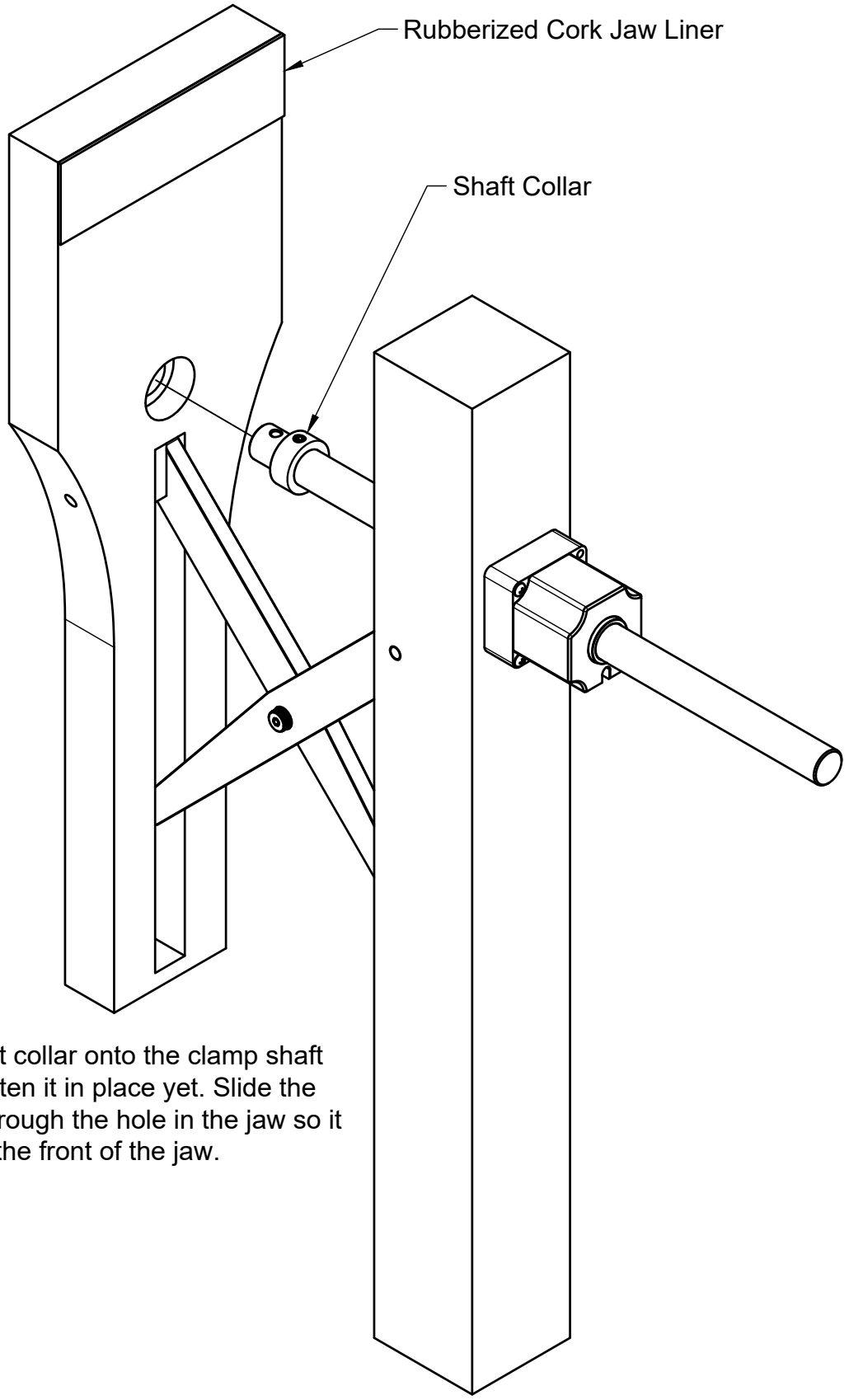

Place the shaft collar onto the clamp shaft but do not tighten it in place yet. Slide the clamp shaft through the hole in the jaw so it protrudes out the front of the jaw.

Install the 2 washers and the thrust bearing onto the clamp shaft as shown. The thrust washers and thrust bearing fit into the front counter-bore but should be slightly proud of the jaw surface. Slide the clamp shaft into the bored hole in the handwheel and align the cross hole in the shaft with the cross hole in the handwheel. Insert the quick release pin into the cross hole and through the shaft. A small split ring is included to replace the large split ring if you don't intend to remove the handwheel very often.

NOTE: The handwheel is shown but this procedure is the same for the wooden hub and handle.

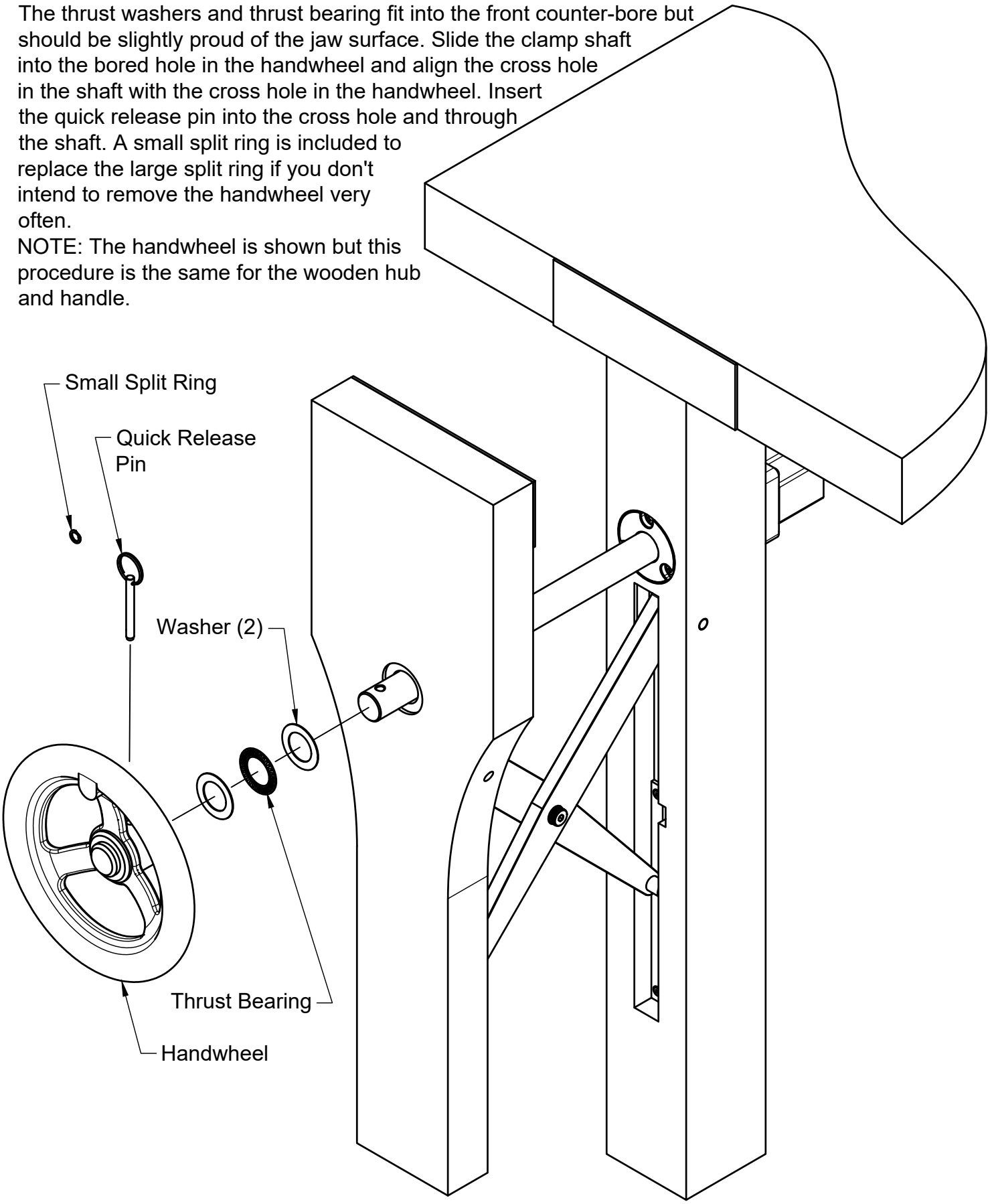

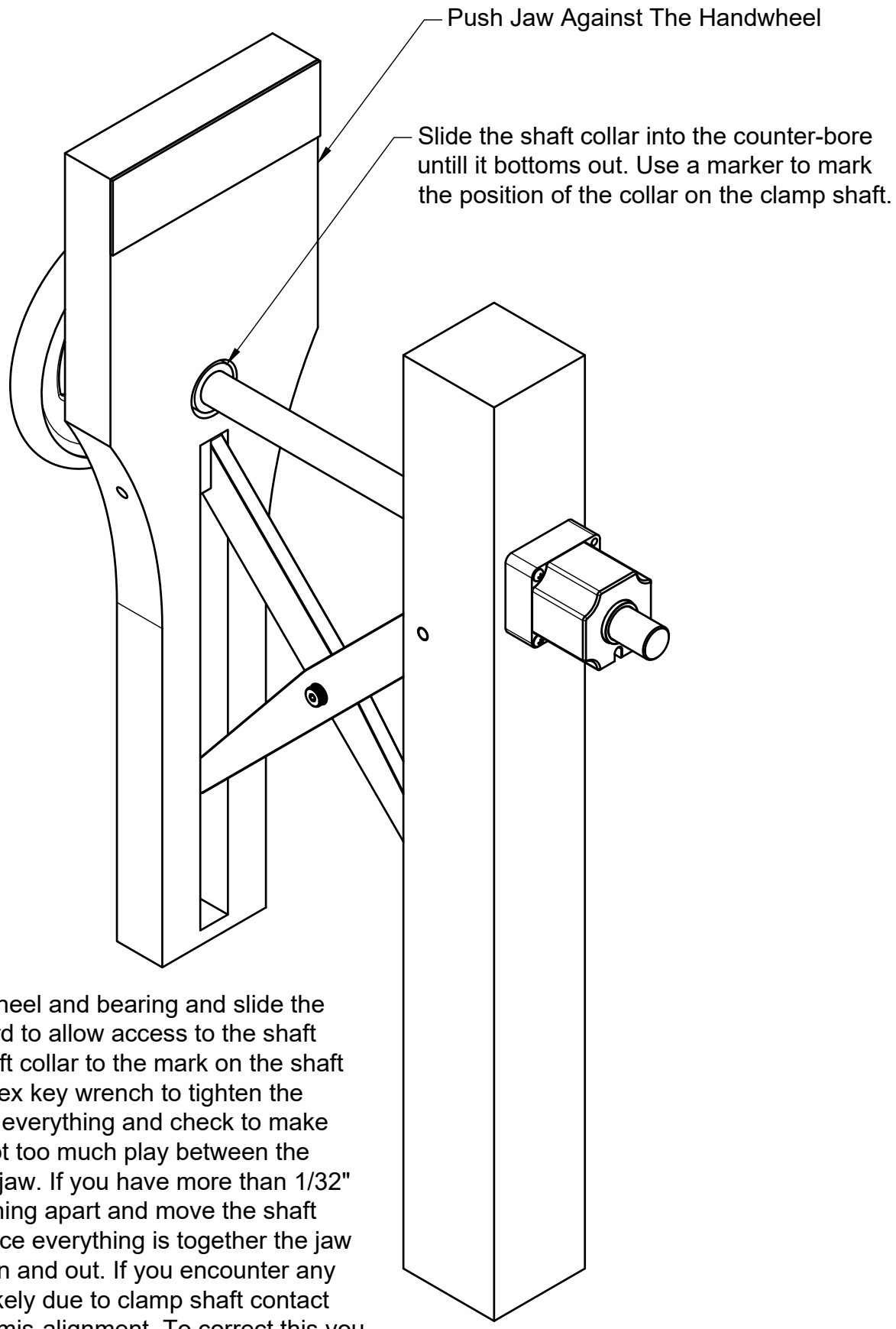

Remove the handwheel and bearing and slide the clamp shaft rearward to allow access to the shaft collar. Align the shaft collar to the mark on the shaft and use the 5/32" hex key wrench to tighten the collar.Re-assemble everything and check to make sure that there is not too much play between the handwheel and the jaw. If you have more than 1/32" of play, take everything apart and move the shaft collar to correct. Once everything is together the jaw should slide easily in and out. If you encounter any binding, it is most likely due to clamp shaft contact with the jaw due to mis-alignment. To correct this you will have to remove material from the 1-1/8" hole where the contact is occurring.

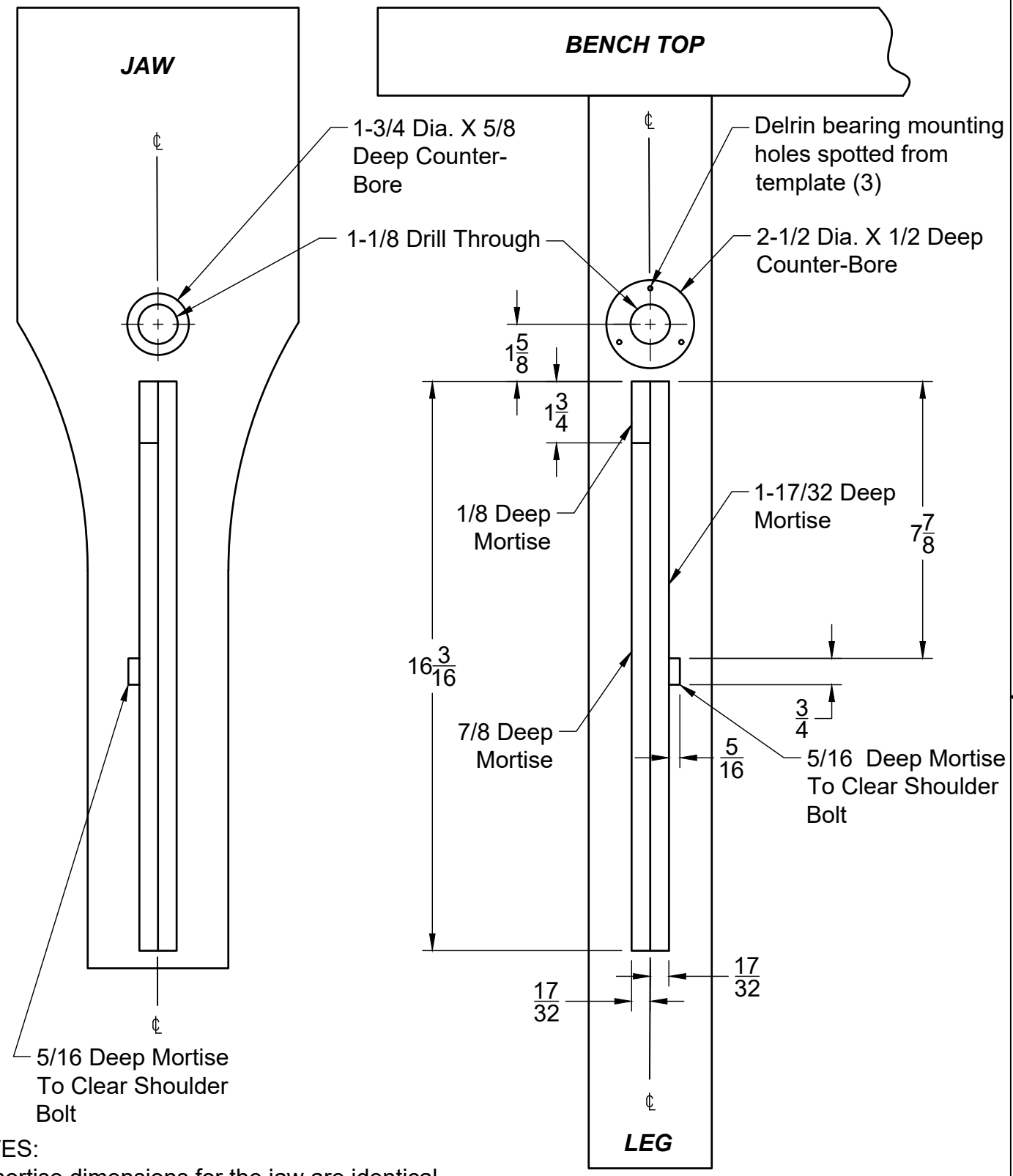

NOTES:
All mortise dimensions for the jaw are identical to the leg mortise dimensions. The shoulder bolt clearance mortise Is on the opposite side.
The dimension from the bench top to the clamp shaft bore center will vary based on bench height and the placement of the mortise relative to the bottom of the leg.